PORSCHE
GT3 CUP CHALLENGE
USA
BY YOKOHAMA

PORSCHE
GT3 CUP CHALLENGE
CANADA
BY YOKOHAMA

IMSA RULES 2019

Revision Date August 14, 2019

Technical Regulations

PORSCHE GT3 CUP CHALLENGE 991.2 (Platinum)

IMSA
EST. 1969

Sanctioned by:

INTERNATIONAL MOTOR SPORTS ASSOCIATION

One Daytona Blvd.
Daytona Beach, FL 32114
(O) +1 (386) 310-6500
(F) +1 (386) 310-6695
www.imsa.com

Table of Contents

ARTICLE 1. DEFINITIONS SPECIFIC TO THE TECHNICAL REGULATIONS 3
ARTICLE 2. TECHNICAL PHILOSOPHY 6
2.1. Technical Eligibility 6
2.2. Balance of Performance Adjustment 6
2.3. Changes 6
ARTICLE 3. USING THESE TECHNICAL REGULATIONS 6
3.1. Structure 6
3.2. Conflict Resolution 7
3.3. Final Authority 7
ARTICLE 4. HOMOLOGATION 7
4.1. Homologation Regulations 7
4.2. Homologation Process 7
4.3. Homologation Files and Documentation 7
4.4. Homologation Inspection 8
4.5. Homologation Testing 8
4.6. Homologation Identifier 8
4.7. Conditions for Use of a Specific Homologation 8
ARTICLE 5. TECHNICAL ELIGIBILITY 9
5.1. Technical Credential Process 9
5.2. Technical Credential Files and Documentation 9
5.3. Technical Eligibility Testing 9
5.4. Technical Credential Identifier 10
5.5. Conditions for Use of Specific Technical Credential 10
ARTICLE 6. BALANCE OF PERFORMANCE 10
6.1. Balance of Performance 10
6.2. Criteria for Adjustments .... **Error! Bookmark not defined.**
6.3. Adjustment Parameters .... **Error! Bookmark not defined.**
6.4. Release of Adjustments .... **Error! Bookmark not defined.**
ARTICLE 7. SAFETY 10
7.1. Driver Safety Harness System 10
7.2. Seat 11
7.3. Driver Containment Nets 11
7.4. Protective Padding 11
7.5. Protective Shielding 12
7.6. Master Electrical Switches 12
7.7. Fire Suppression System 12
ARTICLE 8. DEFINITION OF CLASS 13
8.1. GT3 Cup (GT3) 13
ARTICLE 9. VEHICLE SYSTEMS 14
9.1. General 14
9.2. Modifications to the Specification 14
9.3. Servicing, Repair, and Replacement 14
9.4. Dimensions 14
9.5. Chassis 16
9.6. Driver Interface 16
9.7. Bodywork 16
9.8. Aerodynamic Elements 17
9.9. Engine System 18
9.10. Boost Management 18
9.11. Drive System 18
9.12. Cooling System 19
9.13. Fuel System 19
9.14. Brake System 20
9.15. Steering System 20
9.16. Suspension System 21
9.17. Wheels & Tires 22
9.18. Electronics 22
ARTICLE 10. SERIES REQUIRED ELECTRONICS 23
10.1. Series Scrutineering Data System 23
10.2. Safety Light System 23
10.3. Driver ID System 24
10.4. X2 Transponder System 24
10.5. Leader Light System 24
10.6. Back-lit Panel 24
10.7. Pro-Am Light 24
10.8. In-Car Camera 25
ARTICLE 11. REFUELING SYSTEM 25
11.1. Fuel Transfer 25
11.2. Pit Tank 25
11.3. Peripheral Connections 25
11.4. Refueling Hose 25
11.5. Trolley 25
11.6. Boom 25
11.7. Refueling Restrictor 25
11.8. Level Sensor System 25

Foreword:

For all Members, the IMSA RULES of the International Motor Sports Association establish the foundation for the organization and conduct of all IMSA Sanctioned Events. The IMSA RULES take effect immediately upon publication.

The purpose of the RULES is to: (i) promote safety, the sport of automobile Competition and IMSA, (ii) enhance Competition, (iii) ensure the quality, fairness and integrity of the IMSA programs and operations and (iv) achieve prompt finality in the Competition results ("Purpose").

ALL MEMBERS ARE REQUIRED TO REVIEW THESE IMSA RULES CAREFULLY.

The IMSA RULES consist of following three (3) sections and the Event Supplementary Regulations (SR):

- The Technical Regulations, which outline the rules and regulations for the specific cars and equipment. The Technical Regulations may be modified or changed at any time by the publication of a Technical Bulletin, amending the Technical Regulations.

- The IMSA Sporting Regulations (ISR), which concern Competitor and Event procedures, as well as guidelines for the safe and uniform operation of the sport. The ISR may be modified or changed at any time by the publication of a Competition Bulletin, amending the ISR.

- The Series Supplementary Regulations (SSR) that provides Series-specific information about each IMSA Series. The SSR is integrated into the ISR and are designated with "(SSR)" next to the Paragraph title. The SSR may be modified or changed at any time by the publication of a Competition Bulletin, amending the SSR.

Any portion of the RULES may be modified though Bulletins (Competition Bulletins and Technical Bulletins, respectively) and takes force when published. Once published, the Bulletin shall take precedence over the applicable portion of the RULES. Additionally, the RULES may be modified for an Event by the Race Director through the mandatory briefing instructions.

HOW TO READ THE RULES

These Technical Regulations are a Permissive document. Unless specifically defined as permitted, any modification, change, or adjustment is inherently prohibited. This philosophy is more clearly defined in Article 4 and specific modifications are clearly defined in Article 9.

The Technical Regulations are specific to particular categories, classes and types of race cars in a Series. Where the Technical Regulations conflict with the ISR or the SSR, the Technical Regulations shall govern.

The SR is specific to an Event and published in conjunction with the Event schedule. Where SR conflicts with the ISR, SSR, and/or Technical Regulations, the SR shall govern.

MASTHEAD OF OFFICIALS

John Bishop* / Bill France, Sr.*, Founders – IMSA

Dr. Don Panoz*, Legacy Vice Chairman

Jim France, Chairman

Lesa Kennedy, Director

Ed Bennett, Chief Executive Officer

Scott Atherton, President

Karen Leetzow, Director and Legal Counsel

Simon Hodgson, Vice President, Competition

David Pettit, Vice President, Marketing

***Deceased**

ARTICLE 1. DEFINITIONS SPECIFIC TO THE TECHNICAL REGULATIONS

1.1.1. **Car** means a singular representation of a Car Model possessing a Technical Credential, entered by an Entrant in an Event.

1.1.2. **Car Model** means a specific model of a vehicle constructed by an IMSA-recognized Manufacturer Partner, and intended for Competition.

1.1.3. **Class** means a category for Cars sharing a common set of Homologation Regulations and differentiated from others by type of Car Model.

1.1.4. **Competition** means a contest of competitive nature in which a Car takes part during an Event and results of which Competition are published.

1.1.5. **Constructor** means an entity that designs and builds race car chassis.

1.1.6. **Entrant** means an entity or person who has entered a Car that has been accepted for Competition and holds an IMSA Membership in the capacity of an Entrant or Entrant/Driver.

1.1.7. **Event** means an IMSA Sanctioned motorsport activity. It includes the designated Race as well as all periods for registration, inspections, practice Sessions, qualifying Sessions, racing, pre- and post-Race activities and inspections, and rain or postponed dates related thereto.

1.1.8. **Homologate** means to execute the Homologation Process.

1.1.9. **Homologated** means a Car Model approved through the Homologation Process.

1.1.10. **Homologation** means the concept of all things associated with Homologation Authority approval via the Homologation Process.

1.1.11. **Homologation Authority** means an entity with the authority to Homologate**.**

1.1.12. **Homologation Documentation** means all files, documents, information, and communication associated with the issuance of official approval of Homologation.

1.1.13. **Homologation Identifier** means the unique identifier (generally including a string of characters identifying the Category or Class of Homologation followed by a sequential number assigned to the Car Model) serving as a reference to the official approval of Homologation, assigned by the Homologation Authority.

1.1.14. **Homologation Process** means all procedures associated with petitioning a Homologation Authority for approval that a Car Model complies with the Homologation Regulations.

1.1.15. **Homologation Regulations** means a set of technical requirements and criteria used to design, construct, and document a Car Model intended for racing in a specific category or class of racing.

1.1.16. **Manufacturer** means a Manufacturer Partner constructing an approved Car Model.

1.1.17. **Manufacturer Partner** means a recognized IMSA Official Automotive Partner.

1.1.18. **Permissive** means modifications explicitly authorized by these Technical Regulations are permitted and modifications not explicitly authorized by these Technical Regulations are prohibited.

1.1.19. **Specification** means all technical characteristics of the Car Model defined by the Homologation and Technical Credential.

1.1.20. **Specific Homologation** means the Homologation specific to a particular Car Model.

1.1.21. **Specific Technical Credential** means the Technical Credential specific to a particular Car Model.

1.1.22. **Technical Credential** means the concept of all things associated with IMSA approval via the Technical Credential Process.

1.1.23. **Technical Credential Documentation** means all files, documents, information, and communication associated with the Technical Credential Process.

1.1.24. **Technical Credential Identifier** means the unique identifier that serves as a reference to the Technical Credential granted by the IMSA. Example: IMSA GTLM 20170101 [GTE-0XX].

1.1.25. **Technical Credential Process** means all procedures associated with petitioning IMSA for approval that a Car Model is Technically Eligible.

1.1.26. **Technical Eligibility Form** means the form which documents the Specific Technical Credential.

1.1.27. **Technically Eligible** means conforms to all technical requirements and criteria defined by these Technical Regulations.

ARTICLE 2. TECHNICAL PHILOSOPHY

2.1. Technical Eligibility

2.1.1. Car Models Technically Eligible for participation in IMSA Events are issued a Technical Credential Identifier.

2.1.2. Cars representing a Car Model must always respect the Specification.

2.1.3. To be issued a Technical Credential Identifier for participation in this Class, a Car Model must:

a. Be a Car Model constructed by an IMSA-recognized Manufacturer Partner.
b. Hold a valid Homologation conforming to the Homologation Regulations and Homologation Documentation specific to the Class, approved and issued by an IMSA-recognized Homologation Authority.
c. Successfully complete the IMSA Technical Credential Process.

2.1.4. IMSA is the sole authority to define the Technical Eligibility of a Car Model and issue the Technical Credential.

2.2. Balance of Performance Adjustment

2.2.1. N/A

2.3. Changes

2.3.1. Changes to the Specification are prohibited, unless explicitly authorized by IMSA.

2.3.2. Manufacturers alone must petition IMSA to change the Specification; requests by Entrants are not recognized.

ARTICLE 3. USING THESE TECHNICAL REGULATIONS

3.1. Structure

3.1.1. These Technical Regulations are structured to assist Manufacturers and Entrants in accurate interpretation of the technical expectations and enforcement of the IMSA Technical Philosophy.

a. A brief description of each Article and its purpose follows:

Article / Name	Description / Purpose
1. Definitions Specific to the Technical Regulations	Standardized meanings for specific terms of these Technical Regulations.
2. Technical Philosophy	Guiding principles for these Technical Regulations.
3. Using These Technical Regulations	General structure, purpose, and clarifying statements for these Technical Regulations.
4. Homologation	Pertinent topics related to Homologation.
5. Technical Eligibility	Pertinent topics related to Technical Eligibility.
6. Balance of Performance	General processes associated with competitive equivalency.
7. Safety	Regulatory requirements associated with mandatory safety systems.
8. Definition of Class	Statement of specific Class, Homologation, and Technical Eligibility requirements.
9. Series Required Electronics	Regulatory requirements associated with mandatory electronic systems.
10. Vehicle Systems	Approved modifications to the Homologation component of the Car Model Specification.
11. Refueling System	Regulatory requirements associated with specified refueling system.

3.2. Conflict Resolution

3.2.1. These IMSA Technical Regulations shall govern in any case where a conflict exists with the Homologation Regulations and Documentation.

3.3. Final Authority

3.3.1. IMSA is the Final Authority with respect to these Technical Regulations.

ARTICLE 4. HOMOLOGATION

4.1. Homologation Regulations

4.1.1. Reference to the official Homologation Regulations defining the requirements applicable to these Technical Regulations is provided in ARTICLE 8. DEFINITION OF CLASS.

4.2. Homologation Process

4.2.1. The procedures of the Homologation Process are used to verify that the Car Model meets the necessary requirements and criteria defined by the official set of Homologation Regulations.

4.2.2. This process generally includes the following components or phases, which must be completed to the satisfaction of the Homologation Authority:

a. Homologation Files and Documentation
b. Homologation Inspection
c. Homologation Testing
d. Final Approval
e. Identification Assignment

4.2.3. Homologation Process fees may apply.

4.3. Homologation Files and Documentation

4.3.1. All files and documents required by the Homologation Authority to support the Homologation Process; including but not limited to:

a. Basic Homologation Form
b. Homologation Extension Form(s)
c. Data Sheet(s)
d. CAD Models and Drawings
e. Logged Vehicle Data
f. Homologation Testing Data

4.3.2. Basic Homologation Form: Documents how the Car Model complies with the Homologation Regulations; including photographs, drawings, descriptions, and measurements defining the characteristics, components, parameters, and/or dimensions and tolerances for:

a. General Vehicle
b. Specific Vehicle Systems
c. System Assemblies, Parts and Components
d. Modifications to the Original Series Production Car (if applicable)

4.3.3. Homologation Extension Forms: Describe all approved modifications made to the Basic Homologation Form, including but not limited to modifications for:

a. Correction of incorrect information
b. Safety reasons
c. Reliability reasons
d. Evolutions of type introduced on the original Car Model (if applicable)
e. Evolutions for new components and/or characteristics that cancel and replace those featured in the original Basic Homologation Form
f. Variant options, such as endurance packages

4.3.4. CAD Models and Drawings: As required by the Homologation Authority to support the Homologation Process; including but not limited to:

a. Complete Vehicle CAD Models
b. Specific Component CAD Models
c. Specific Component Drawings
d. Engine Air Intake Restrictor(s)

4.3.5. Homologation Testing Data: Information, documentation, data, and results from Homologation Testing.

4.4. Homologation Inspection

4.4.1. The inspection process for drawings, CAD models, any reference component, and the constructed Car Model by the Homologation Authority.

a. These inspections confirm that a Car Model complies with the Homologation Regulations and are generally conducted as part of the following phases of the Homologation Process:

i. Design
ii. Construction
iii. Final Approval

4.5. Homologation Testing

4.5.1. Any testing conducted by the Homologation Authority to support the Homologation Process; including, but not limited to:

a. Straight-line Testing
b. Wind Tunnel Testing
c. Engine Dyno Testing
d. Track Testing

4.6. Homologation Identifier

4.6.1. The Homologation Identifier is electronically stamped/associated with all information, documentation and files associated with the Homologation.

4.7. Conditions for Use of a Specific Homologation

4.7.1. At all times during IMSA-sanctioned Events it is the Entrant's responsibility to ensure the configuration of the Car Model represents the Homologation components of the Specification; including:

a. As-Homologated Configuration
b. As-Delivered Configuration
c. Parts Manual
d. Homologation Extension Form Configuration

4.7.2. The original, As-Homologated Configuration of the Car Model must not be modified unless permitted by these Technical Regulations.

4.7.3. The As-Delivered Configuration of a Car must respect the as-received configuration from the Car Model Manufacturer, unless permitted by these Technical Regulations.

4.7.4. The Parts Manual is the official parts catalogue for the Car Model as defined by the Car Model Manufacturer or Constructor:

a. Specific parts listed in the Parts Manual must be used on all representations of a Car Model unless permitted by these Technical Regulations.

4.7.5. To be eligible for use in any IMSA-sanctioned Event, modifications detailed in Homologation Extension Forms must:

a. Comply with these Technical Regulations.
b. Be approved by, or have initiated the process to obtain approval from, the Homologation Authority, and appended to the Car Model Homologation.
c. Be approved by IMSA.
d. Be available to all Entrants of the relevant Homologated Car for the next Event.

ARTICLE 5. TECHNICAL ELIGIBILITY

5.1. Technical Credential Process

5.1.1. Manufacturers may begin the Technical Credential Process for a Car Model provided the Car Model:

a. Holds, or have initiated the process to obtain approval from, a valid Homologation as defined in these Technical Regulations.
b. Is approved by IMSA.

5.1.2. The procedures of the Technical Credential Process are used to verify that the Car Model meets the necessary requirements and criteria defined by these Technical Regulations.

5.1.3. This process generally includes the following components or phases, which must be completed to the satisfaction of IMSA:

a. Technical Credential Files and Documentation
b. Technical Eligibility Testing
c. Final Approval
d. Identification Assignment

5.1.4. IMSA may request Manufacturers submit reference components to support the Technical Credential process.

a. IMSA may retain these components without compensation.

5.1.5. IMSA may request Manufacturers submit reference tooling and/or templates to support the Technical Inspection process.

5.1.6. Technical Credential fees may apply.

5.2. Technical Credential Files and Documentation

5.2.1. All files and documents required by IMSA to support the Technical Credential Process; including but not limited to:

a. Technical Eligibility Form
b. Data Sheet(s)
c. CAD Models and Drawings
d. Logged Vehicle Data
e. Electronic Controller Calibrations
f. Technical Eligibility Testing Data

5.2.2. Technical Eligibility Form: Documents how the Car Model complies these Technical Regulations; including:

a. List of all files and documentation associated with the Specific Homologation of the Car Model
b. List of all files and documentation associated with the Specific Technical Credential of the Car Model
c. All approved IMSA-Only Declarations

5.2.3. CAD Models and Drawings: As required by IMSA to support the Technical Credential Process; including but not limited to:

a. Complete Vehicle CAD Models
b. Specific Component CAD Models
c. Specific Component Drawings
d. Additional components requested by IMSA

5.2.4. Technical Eligibility Testing Data: Information, documentation, data, and results from Technical Eligibility Testing.

5.3. Technical Eligibility Testing

5.3.1. Any testing conducted by IMSA to support the Technical Credential Process; including, but not limited to:

a. Restrictor Flow
b. Engine Dyno
c. Wind Tunnel
d. On-track Testing
e. Refueling Testing

5.4. Technical Credential Identifier

5.4.1. The Technical Credential Identifier is electronically stamped/associated with all information, documentation and files associated with the Technical Credential.

5.5. Conditions for Use of Specific Technical Credential

5.5.1. At all times during IMSA-sanctioned Events it is the Entrant's responsibility to ensure the configuration of the Car Model represents the approved Technical Credential components of the Specification.

ARTICLE 6. BALANCE OF PERFORMANCE

6.1. Balance of Performance

6.1.1. N/A.

ARTICLE 7. SAFETY

7.1. Driver Safety Harness System

7.1.1. OE Belts are strongly recommended.

7.1.2. Cars must be equipped with a minimum 6-point Driver safety harness with a valid label demonstrating compliance with one of the following standards:

a. FIA Standard 8853/98: FIA Safety Harnesses Standard

i. FIA Technical List #24: Harnesses Homologated by the FIA according to the FIA Standards 8853/98 and 8854/98

b. FIA Standard 8853-2016: Safety Harnesses

i. FIA Technical List #57: Harnesses Homologated according to the FIA Standard 8853-2016

c. SFI Specification 16.5: Stock Car Driver Restraint Assemblies

i. Specification
ii. Manufacturers

SFI Specification 16.6: Advanced Motorsport Driver Restraint Assemblies

iii. Specification
iv. Manufacturers

7.1.3. Installation must be performed in accordance with instructions provided by the system supplier and/or manufacturer.

a. Belt components must be installed at each anchor point to prevent accidental release or opening.
b. Individual belt straps must be independent; any method or attempt to combine individual straps is prohibited.
c. Elastic retention straps are prohibited on shoulder belts

7.1.4. Harnesses must be replaced at the request of IMSA, or whenever the following conditions occur:

a. Expiration:

i. FIA Homologated: Immediately following December 31st of the year printed on the label.
ii. SFI Certified (punched/cut label): Two years from the date as stated on label. If label is not properly "cut" by the manufacturer or their representative, the date for expiration shall be January 1st of the earliest year printed on the label + two years
iii. SFI Certified (non-punched label): On June 30th or December 31st: of the year identified as the date for expiration

b. Damage:

i. Following a severe collision.
ii. Webbing is cut or frayed, or weakened due to actions of chemicals or sunlight.
iii. Buckles are bent, deformed, rusted, or improperly functioning.

7.1.5. Entrants are responsible for ensuring the Driver safety harnesses and all associated components are properly labeled, installed, used, and maintained.

7.1.6. Belt components must be used as designed by the manufacturer and tested by SFI or FIA. It is prohibited to "mix" belt components to include:

a. Belt components from different manufacturers.
b. Belt components certified by SFI and FIA.

7.2. Seat

7.2.1. Model Year 2017 and newer (991.2) cars: OE Recaro seat is required:

a. The seat can be adjusted by removing or adding upholstery.
b. Only PMNA approved padding may be used.
c. The original mounting (seat rail and bracket) must be retained.
   i. Changes require the consent of PMNA and IMSA.

7.3. Driver Containment Nets

7.3.1. Cars must be equipped with center, and Driver-side containment nets with a valid label demonstrating compliance with one of the following:

a. FIA Standard 8863-2013: Racing Nets
   i. FIA Technical List #48: Racing Nets Homologated according to the FIA Standard 8863-2013
b. SFI Specification 37.1: Roll Cage Nets
   i. Specification
   ii. Manufacturers

7.3.2. Installation requirements:

a. Supplier and/or manufacturer installation instructions must be respected.
b. Horizontal webbing must be oriented towards the Driver.
c. When secured at anchor points, nets must be:
   i. Oriented parallel to the Car centerline.
   ii. Located with minimal gap to the Driver's helmet.
d. Signage or equipment may be attached to nets provided:
   i. The designed purpose of the net is respected.
   ii. Visibility over and/or through the net is unobstructed.

7.3.3. Containment nets must be replaced prior to the expiration date:

a. FIA Homologated: Immediately following December 31st of the year printed on the label.
b. SFI Certified: (punched/cut label): Two years from the date as stated on label. If label is not properly "cut" by the manufacturer or their representative, the date for expiration shall be January 1st of the earliest year printed on the label + two year.
c. SFI Certified (non-punched label): On June 30th or December 31st: of the year identified as the date for expiration.

7.4. Protective Padding

7.4.1. Cars must be equipped with non-flammable protective padding with a valid label demonstrating compliance with one of the following standards:

a. FIA Standard 8857-2001: FIA Roll Cage Padding Standard
   i. FIA Technical List #23: Roll Cage Padding Homologated by the FIA
b. SFI Specification 45.1: Roll Cage Padding
   i. Specification

ii. Manufacturers

7.4.2. Installation requirements:

a. Padding must be located to protect the Driver (body and/or helmet) against direct contact with the safety cage in a collision.
b. Protective padding must be securely affixed to prevent rolling or displacement.

7.5. Protective Shielding

7.5.1. Cars may be equipped with shielding to protect the Driver against contact with cockpit equipment in a collision.

7.5.2. Installation requirements:

a. Installations must not impact cockpit exit.
b. Installations of protective shielding must use fire-resistant materials and if impact padding is used it must comply with FIA 8857-2001, SFI 45.1 or SFI 45.2.
c. Installations must be ~~approved by~~ presented to and approved by IMSA at the time of technical inspection.

7.6. Master Electrical Switches

7.6.1. Cars must be equipped with interior and exterior master electrical switches as homologated and installed as OE.

7.6.2. Systems must remain functional during any on-track activity or at the request of IMSA. Master electrical switches must be spark-proof, and when activated must:

i. De-energize all electrical circuits.
ii. Stop the engine.

7.6.3. The interior master switches must be installed within the cockpit, and located so the driver may activate the switch when seated in a normal position with safety belts fastened and steering wheel in place.

7.6.4. The exterior master switch must be installed proximal to the fire suppression control at (or near) the base of the left side A-Pillar.

a. Exterior master switch must be located such that the emergency responders may activate with a singular action:

i. Using a gloved finger, or tools such as a hook.
ii. Unencumbered by bodywork, windscreen wipers, or any equipment that may require multiple actions.

b. A method for preventing activation of the exterior master switch:

i. May be enabled when the Car is in Technical Inspection, in the Paddock, or located near large crowds, such as during pre-Race activities.
ii. Must be removed prior to participation in on-track activity.

7.6.5. Interior and exterior master switches must be clearly identified by a self-reflective symbol of a red spark surrounded by a white-edged, blue triangle with a base greater than 30 mm.

7.7. Fire Suppression System

7.7.1. Cars must utilize the OE Homologated Porsche Fire System as installed in the car.

7.7.2. System must be securely mounted.

a. The following must be visible without the use of photography, tools, or seat removal:

i. Pressure gauge (if present)
ii. Date of manufacture
iii. Next required service date

b. Nozzles must not point directly at the Driver's face.

7.7.3. System must include an exterior activation mechanism proximal to the exterior master electrical switch at (or near) the base of the left side A-Pillar.

a. Exterior activation mechanism must be located such that emergency responders may activate with a single action:

i. Using a gloved finger, or tools such as a hook.
ii. Unencumbered by bodywork, windscreen wipers, or any equipment that may require multiple actions.

b. A method for preventing activation of the exterior activation mechanism:

i. May be enabled when the Car is in Technical Inspection, in the Paddock, or located near large crowds, such as during pre-Race activities.

ii. Must be removed prior to participation in on-track activity.

7.7.4. Identification

a. Exterior activation mechanism must be marked with a self-reflective symbol with a red edge surrounding a red "E" inside a white circle at least 100 mm in diameter.

7.7.5. Inspection

a. IMSA may require removal of the fire bottle for Technical Inspection.

b. Entrant is responsible to demonstrate proper system function of the interior and exterior fire suppression activation mechanisms, using the “test” mode if present.

7.8. Towing Eyes

7.8.1. Front and Rear towing eyes as supplied with the car must be properly mounted and marked per IMSA Rules.

ARTICLE 8. DEFINITION OF CLASS

8.1. GT3 CUP-PLATINUM

8.1.1. Class Structure: GT3 CUP-PLATINUM cars compete in the GT3 CUP Challenge Series, Presented by Yokohama.

8.1.2. Eligibility Requirements: To be eligible for participation in the Class, a Car Model must respect the Specification defined by the Homologation and Technical Eligibility requirements:

a. Homologation (GT3 CUP):

Homologation Authority:	FIA
Homologation Specification:	GT3 CUP Challenge
Homologation Regulations:	GT3 CUP Challenge
Additional Documentation:	Porsche GT3 Cup Regulations

8.1.3. Purpose

The Series is designed to keep competition fair and low cost by minimizing possible changes to the Cars as homologated and delivered. Therefore, any technical actions by competitors in contravention with these principles is subject to penalty.

a. All cars must be original Porsche Cup Cars as delivered by Porsche and the VIN number must reflect this. No aftermarket conversions to Cup Cars are permitted.

b. Except where specifically permitted herein, there are no changes permitted to the Cars from their original specifications. There must be no welding, cutting, machining, drilling, acid dipping or other chemical treatment of the Car to change its mechanical properties.

c. Except where specified, all parts must be OE as defined in IMSA RULES Art.1. Transposition of parts from one model year to another is prohibited except as specified herein. Modification of any supplied part, modifying their mounting or mounting position is prohibited.

d. It is permitted to carry out work on a vehicle which is part of the regular maintenance of the vehicle or that serves for the replacement of parts that have become defective as a result of wear or accident.

i. The utilization of components manufactured by Porsche for other vehicles is prohibited unless specifically permitted within these Regulations or authorized via Series Bulletin.

ii. Standard fasteners such as nuts, bolts, washers, circlips, spring washers, split pins, etc. must only be replaced with original Porsche spare parts.

iii. In the case of threaded fasteners, the type, size and pitch of the thread must not be changed.

e. If, in the sole judgement of the Series Technical Manager, the Cars do not meet the spirit or intent of these Regulations, he may order them to be corrected to be in compliance prior to any further participation in the Event.

   i. Any waiver of any technical requirement by the Series Technical Manager shall specify the length of time the waiver shall be in force and shall not constitute on ongoing waiver, or a waiver for any other Cars for the same issue.

f. Limits of Adjustments:

   i. Except as may be specified or permitted in these Regulations, the limit of any adjustment on the Car shall be the range of adjustment permitted by the OE parts using the OE fixation points as supplied by the manufacturer.
   ii. Additional adjustment points within or outside the range must not be created by altering parts from their as-manufactured configuration.

ARTICLE 9. VEHICLE SYSTEMS

9.1. General

9.1.1. All Vehicle Systems and associated sub-systems are listed in this Article.

a. Where change to the Homologated Vehicle Systems is permitted, regulatory text is **bold and underlined**.
b. Where change to the Homologated Vehicle Systems is prohibited, regulatory text is light grey.
c. Advisory statements are in normal text.

9.2. Modifications to the Specification

9.2.1. Entrants may execute the following changes to parameters defined by the Homologation component of the Car Model Specification, provided these Technical Regulations, all current Technical Bulletins, and the Technical Credential are fully respected:

a. Adjust component settings defined as adjustable.
b. Replace components with parts defined as optional.

9.2.2. Manufacturers must make any declarations listed in these Technical Regulations in the Technical Eligibility Form.

9.2.3. Further authorization to modify the Specification and/or As-Delivered Condition is granted via the following formal communication methods:

a. Published IMSA Technical Bulletin
b. Approved updates to the IMSA Technical Eligibility Form

9.2.4. Informal and/or verbal communication is not considered valid authorization.

9.3. Servicing, Repair, and Replacement

9.3.1. All servicing or repair must be made in good faith to restore the Car and all components to their originally intended form and function as defined by the Specification.

9.3.2. Entrants may replace damaged or worn components provided these Technical Regulations are respected.

9.4. Dimensions

9.4.1. General

a. IMSA's measurement instruments are the official measurement instruments.

9.4.2. Reference Surface

a. The lowest plane of the underside of the car of the Car is measured to the Technical Inspection scale plane.

9.4.3. Mass

a. Vehicle Weight

   i. At all times during the Event, the minimum weight of the Car, with Driver properly attired in required racing equipment must be as follows:
   ii. Model Year 2017 and newer (991.2) cars: 1295 kg

iii. Cars are temporarily ballasted (by IMSA) to the Driver's Official Weight for all technical inspections during an Event.
iv. Drivers are not required to be present for any technical inspections unless specifically requested by the Series Technical Manager.
v. The addition of fluids or any type of ballast (such as ice or water in the Driver cooling system) in parc ferme' is prohibited.

b. Driver Weight

i. Drivers must be present at the beginning of the first Event with all required racing equipment to be weighed.
ii. Once IMSA has recorded a Driver's Weight, this weight becomes the "Official Weight".
iii. This "Official Weight" will be rounded up to the next whole pound.
(i) For example; if a Driver and required equipment weigh 203.49 pounds, the recorded weight will be 204 pounds.
iv. The Official weight is used in Scrutineering for this and all subsequent Events.
v. The Official Weight will not be changed after the start of an Event.
vi. A Driver may request to be reweighed at the beginning of an Event and a new Official Weight will be recorded and effective beginning at that Event.
vii. IMSA may require a Driver to be reweighed at any time.

9.4.4. Ballast

a. <u>Entrants may add or remove ballast to achieve minimum mass:</u>

i. Only original Porsche ballast components must be used.
ii. Ballast must be positioned in the designated fixing points in the position of the passenger seat according to the illustration in attachment 6. This is the only authorized location for ballast to be added to the Car.
iii. Addition or removal of ballast during the race is prohibited.
iv. No weight may be removed from the OE structure of the Car and be placed in the ballast box.
v. IMSA may, at its sole discretion, determine any additional weight that must be carried on a Car for any phase of the competition.

9.4.5. Minimum Ride Height

a. The minimum ride height clearance of the ready-to-race vehicle (with ballast in the vehicle equal to the Drivers' "Official Weight") and Dry-Type tires in accordance with *<u>SSR Art. 11.17</u>* (set at 29.0 psi +/- 1.5 psi, or at 2.0 bar +/- 0.1 bar air pressure) must not be less than the specified dimension, as measured at the specified measuring points, at any time during the Event.
b. At any time during the Event, the ride height clearance at the front of the Car must be a minimum of 78 mm for 2017 and newer Cars.
c. At any time during the Event, the ride height clearance at the rear of the Car must be a minimum of 100 mm for 2017 and newer Cars.
d. The measurement points are shown in Illustration 1.

i. At the front they are the mounting bolts (M14x120) of the cross member/bodywork in relation to the reference surface.
ii. At the rear they are the machined surface on the side section in relation to the reference surface.
iii. The ride height must only be changed within the existing adjustment range.

9.4.6. Overall Dimensions

a. Length

i. 4577 mm +/- 10 mm.

b. Wheelbase

i. Measured from center of the rear hub to the center of the front hub
(i) Model Year 2017 and newer (991.2) cars 2456 mm +/- 15 mm.

c. Overhang

i. Front: 1046 mm +/- 10 mm, measured from the middle of the wheel of the front axle to the leading edge of the vehicle (first point in the direction of the longitudinal axis, front splitter included).
ii. Rear: 1075 mm +/- 10 mm, measured from the middle of the wheel of the rear axle to the rear edge of the vehicle (last point in the direction of the longitudinal axis, rear wing excluded).

9.5. Chassis

9.5.1. General

a. Roll Cage

i. Full roll cages of approved design are mandatory.
ii. Porsche OE Design is the only acceptable roll cage.

9.5.2. Air Jack System

a. As installed by Porsche

9.6. Driver Interface

9.6.1. General

9.6.2. Steering Wheel

a. Must be continuous and as delivered by Porsche.

i. Hub extensions are not permitted for Model Year 2017 and newer (991.2) cars.
ii. The adjustment facility in length and height which is available as standard may be used.

9.6.3. Pedal Box

a. <u>Entrants may apply non-slip adhesives to the surface of driver pedals.</u>

9.6.4. Shifting Mechanism

9.6.5. Driver Adjustable Components

9.6.6. Driver Cooling Systems

a. <u>Entrants may install a Driver Cooling System, i.e. Cool Suit.</u>

i. Evaporative-loss Freon cool suits are prohibited.

b. Installations must be approved my IMSA and meet the following conditions:

i. The mounting location and installation for the system is unrestricted provided it serves no purpose other than retaining the cooling system in the event of a collision.
ii. All driver cooling system containers must be securely mounted.
iii. The use of hook and loop fasteners (Velcro) is prohibited.

c. Driver fresh air systems are permitted.

9.6.7. Drink system

a. A drink system may be used.

i. Electric pumps are prohibited.

b. Installation subject to IMSA approval.

9.7. Bodywork

9.7.1. **<u>General</u>**
<u>Platinum Cup Class:</u> Model Year 2017 and newer Porsche 911 GT3 Cup (type 991.2)

a. All bodywork must remain OE and no alternate parts (except as provided for herein) are permitted. No unauthorized modifications are permitted to the bodywork.
b. Hoods, deck lids and movable body sections must be secured with supplemental pins or fasteners. Latches may be deactivated. On cars where a key is required to open the trunk lid, the lock must be deactivated or removed.

9.7.2. Windows

a. Front and rear windows must remain OE.

i. The use of rear window supports, including non-OE fasteners is prohibited.
ii. Reflective or mirror window treatments are prohibited.
iii. Damaged or cracked windshields must be approved by the IMSA GT3 Cup Technical Manager prior to on-track use.

b. Side door windows must remain OE, with the following exceptions permitted:

i. Driver side door window may be removed and replaced with a window net meeting FIA Specifications (FIA Art. 253.11) or SFI Specification 27.1
ii. Passenger side door window may be removed with no window net required.

c. <u>Entrants may install the following films to the front windscreen:</u>

i. Tear-off
ii. Anti-fog

d. A NACA duct may be installed in the rear side windows for the purpose of driver cooling.

i. A minimum of 1" of the original border of the window must be retained.
ii. Maximum of 1 duct per side with 2 ducts permitted per car.
iii. Maximum cutout area of 26 cm x 16 cm.
iv. No duct shall break the outward plane of the surface on which it is installed.
v. Ducts must be translucent.
vi. Duct and/or hoses must not impede cockpit exit or driver's visibility.
vii. Side window may be retained with fasteners not greater than 6 mm diameter, black in color, acceptable to IMSA Officials.

e. The use of tape or any material to cover the radiator openings is prohibited.
f. The use of tape to cover any mechanical components or adjustments is prohibited.

9.7.3. Mirrors

a. Two external rear view mirrors are required.
b. Rear view mirrors must be the OE mirrors as installed.

9.7.4. Bodywork Seams

a. Taping over body slots and openings is not allowed.

9.7.5. Decals

a. <u>Entrants may apply removable die cut sponsorship decals with the approval of IMSA.</u>

9.8. Aerodynamic Elements

9.8.1. General

9.8.2. Splitter

9.8.3. Dive Planes

9.8.4. Body Gurney

9.8.5. Wings

a. OE wing and wing mounts must be used.

i. Neither may be altered in any way from their OE configuration.
ii. Nothing may be done to alter the position of the wing and wing mount in relation to the body of the Car, from the OE position.
iii. Notwithstanding the above, the position of the wing element may be changed within the OE adjustment range.
(i) No additional adjustments or mounting holes may be made.

9.8.6. Rear Wing Gurney

a. The Gurney lip (wicker), Porsche Part# PMN.991.512.105.8A is required for Model Year 2017 and newer (991.2) cars.
   i. The Gurney lip must be attached to the top of the rear edge of the rear wing without alteration.

9.8.7. Floor

9.8.8. Friction Blocks

9.8.9. Diffuser

9.9. Engine System

9.9.1. General

a. Manufacturer seals must be respected

9.9.2. Eligible Engine

a. The engine must be originally sealed by Porsche Motorsport or returned to PMNA to be dynoed, examined and sealed (or by a PMNA/IMSA approved technical center). Contact PMNA at (714) 546-6939.

9.9.3. Lambda

9.9.4. RPM

9.9.5. Replacement

a. Replacement of the engine block must be reported immediately to the Series Technical Manager in writing.
b. If the engine block is changed following Qualifying, the Car must start the race from the back of the grid.

9.9.6. Exhaust

a. The entire exhaust system must remain OE, including interior and tail pipes.
b. All 2017 and newer Cars must be fitted with the Super Cup exhaust system and all associated hardware.
   i. LH-Part# 99711125194
   ii. RH-Part# 99711125294
c. Additional mufflers may be required to meet local sound ordinances (Per SR).

9.9.7. Turbo

9.9.8. Engine Control Unit (ECU)

a. Only the OE Engine Control Units (ECU's) with one program are permitted.
   i. Tampering with or reprogramming of the ECU is strictly prohibited.
   ii. Except as provided for herein, additional components must not be installed between the ECU and the engine.
   iii. The wiring harness must remain OE.
b. ECU's will be sealed to the connectors at Scrutineering.
   i. Tampering with or breaking the seals is prohibited.
   ii. Only Series officials or authorized Porsche technicians may break the seals, which must then be replaced by the Series.
c. ECU's are subject to random seizure and replacement at any time.
d. Authorized Porsche and Series officials may access and inspect the ECU programming at any time.

9.9.9. Engine Transportation Crate

a. Entrant must have immediately available a crate sufficient to securely and safely package and ship an engine.

9.10. Boost Management

9.11. Drive System

9.11.1. General

a. Transmission

i. OE. Transmission must either be originally sealed by PMNA / PMNA Partner or examined by PMNA / PMNA partner and sealed.

b. Differential

i. OE. Must be sealed together with transmission by PMNA or PMNA partner.

c. Clutch

i. OE.

d. CV Joints and Axle

i. OE.

e. Gear Ratios

i. OE

Gear	2017 Ratio
1st	13/41
2nd	17/40
3rd	19/36
4th	19/29
5th	24/30
6th	34/35

f. Shift Mechanism

i. Model Year 2017 and newer (991.2) cars are equipped with Paddle Shift System.

g. Blipper

i. Model Year 2017 and newer (991.2) cars are fitted with auto-blipper.

9.11.2. Fluids & Lubricants

a. Must be as Recommended in PMNA Technical Manual and Parts List

9.11.3. Clutch

9.11.4. Gearbox

9.11.5. Gears

9.11.6. Gearbox Control Unit

9.11.7. Differential

9.11.8. Axles

9.11.9. Uprights

9.12. Cooling System

9.12.1. General

9.12.2. Fluids

a. <u>Entrants may utilize non-glycol based fluids.</u>

9.12.3. Inlet Blockers

9.12.4. Water System

9.12.5. Oil Cooling System

9.13. Fuel System

9.13.1. General

9.13.2. Fuel Types

a. The approved fuel for the Class is IMSA E10, as supplied by VP Fuels.

i. IMSA may require a fuel sample for inspection via a gas chromatograph.

9.13.3. Fuel Cell

a. Fuel cells meeting FIA-FT3 specification or higher are required on all Cars.

i. Must be mounted outside the Driver's compartment.
ii. Must be separated by firewalls, flame and leakproof and protected as far a practicable by the roll cage.
iii. Steel or steel braided fuel lines with appropriate fittings, fuel cell check valve, and vent line check valve are mandatory.

b. Model Year 2017 and newer (991.2)

i. Modifications to the OE Fuel Cell and associated components is prohibited.

9.13.4. Fuel Lines

9.13.5. Fuel Sample Port

a. Entrants must equip the Car with the approved self-sealing connector for extraction of fuel samples:

i. Approved Connector: Staubli P/N: CBI06.7251/IA/JKV.
ii. Must be located immediately before the injector nozzles.
iii. Installation must be approved by IMSA.

9.13.6. Refueling Receptacle

9.14. Brake System

9.14.1. General

a. The brake system (including calipers, rotors, master cylinders and pads) must be OE parts.
b. Master cylinders must be maintained in their original front and rear hydraulic circuit positions.
c. Platinum Masters Class cars are required to use the Part# PMNMTH355200 991.2 Cup Bosch ABS Kit, Porsche Motorsports ABS. System.
d. Platinum Masters Class cars are required to use the most current Porsche Motorsports North America programming strategy as installed by PMNA Representatives.

9.14.2. Fluids & Lubricants

a. Unrestricted.

9.14.3. Bias Assembly

9.14.4. Master Cylinders

9.14.5. Brake Lines

9.14.6. Calipers

9.14.7. Rotors

9.14.8. Pads

9.14.9. Ducting

9.14.10. Brake Duct Inlet Blockers

9.14.11. Anti-Lock Braking System

9.15. Steering System

9.15.1. General

9.15.2. Fluids & Lubricants

a. Must be as recommended in PMNA Technical Manual and Parts List.

9.16. Suspension System

9.16.1. General

a. All parts must be retained in their original mounting positions, with the following exceptions:

9.16.2. Geometry Elements

9.16.3. Springs

a. OE main and helper springs must be used.

i. The OE rear main chassis springs must be replaced with the 280N/mm springs Porsche Part# PMN.991.333.531.8C.
ii. The installation of any alternate chassis springs is prohibited.

9.16.4. Dampers

a. Model Year 2017 and newer (991.2)

i. Only the OE front and rear Sachs shock absorbers in their original conditions may be used.

9.16.5. Bump Rubbers and Packers

a. The following number is marked on the bump stops of the rear vibration dampers:

i. 0049 5111 0 250

b. Bump stops with any other markings are not allowed.

9.16.6. Anti-Roll Bar

a. Model Year 2017 and newer (991.2) cars must use OE Front (991.343.173.8A) and Rear (991.333.171.7A) Anti-Roll Bars.
b. May be disconnected but no parts may be removed.
c. May be adjusted using only OE range of adjustment holes.

9.16.7. Suspension Adjustment:

a. The chassis may be modified within the scope of the specified OE setting range.
b. All genuine OE parts must be retained.
c. The maximum permissible thickness of the spacer washers in the front and rear axle control arms are:

i. Model Year 2017 and newer (991.2)
(i) Front axle: 18 mm
(ii) Rear axle: 15 mm

Trailing Arm:

d. Axle bearing points of the front and rear wishbones must be left in the OE position:

Model Year 2017 and newer (991.2)

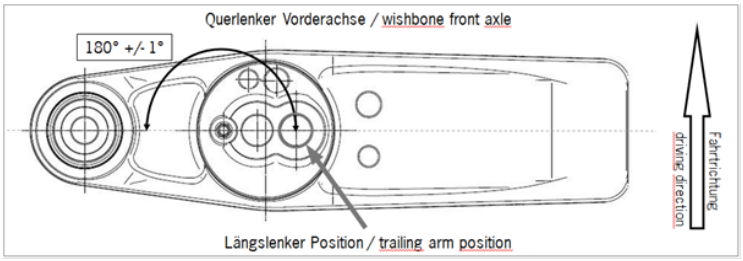

For Model Year 2017 and newer (991.2) cars the screw positions of the trailing arms at the wishbone bearing points may not be modified.

9.16.8. Camber / Pressure

a. The maximum permitted camber for Model Year 2017 and newer (991.2) cars is:

i. Front -4.3°
ii. Rear -3.5°

9.16.9. Third Elements

9.17. Wheels & Tires

9.17.1. General

9.17.2. Wheels

a. By vehicle Model Year, the following wheels (Part Number, Size and Offset) are mandatory:

i. Model Year 2017 and newer: APP Wheels
(i) 991.362.131.8A 10.5”x18” Front w/ 28 mm OS
(ii) 991.362.151.8A 12”x18” Rear w/ 53 mm OS
ii. All wheels must be clearly and permanently marked with Car number.
iii. A minimum of three sets of wheels are recommended.

9.17.3. Tires

a. IMSA regulates the eligibility of tires in Competitions in order to promote equality.
b. Traction compounds or any substance that might alter the physical properties of a tire as supplied by its manufacturer are prohibited.
c. Tire warmers and any other means of artificially warming tires are prohibited.
d. Racing Tires: Mandatory, unless SSR or SR provide otherwise.

9.18. Electronics

9.18.1. General

a. Battery

i. Model Year 2017 and newer (991.2) cars must remain in OE location.
ii. May be replaced with a similar type, weight and size.
iii. Lithium Ion batteries are prohibited.
iv. Must be securely mounted and protected by a box made of insulating material.
v. Except for dry cell type, protection box must include a vent exiting outside the cockpit.

b. Model Year 2017 and newer (991.2) cars Additional Power Requirements:

i. Cooling systems, fresh air systems, etc. must be connected directly to the Cosworth IPS via solid state relay as approved by PMNA.
ii. Any additional electrical connection or modification to the vehicle wiring harness is prohibited.

c. Must utilize OE dash as supplied with vehicle.

9.18.2. Data Logger

a. Data collection permitted, however:

i. Use of the factory-fitted OE data recording system is required.
(i) Model Year 2017 and newer (991.2) cars Cosworth Omega ICD-P.
ii. Sensors are limited to those listed in the corresponding Model year Porsche GT3 Cup Technical Manual.
iii. The installation of optional steering angle sensors and brake pressure sensors (one front and one rear) and expansion of memory are permitted. The use of genuine components manufactured by Cosworth are required.
iv. For Model Year 2017 and newer (991.2) cars the use of GPS, Cosworth Part # 01F-050660-DTM, is permitted. Without exception, Model Year 2017 and newer (991.2) cars are required to use the Series-provided Cosworth lap-trigger beacon for all IMSA Official Sessions.

v. All other sensors, connected or disconnected, are prohibited, including, but not limited to: shock potentiometers and ride height sensors.
vi. Any method of wireless transmission of data to or from the Car is prohibited except as noted in Technical Regulations Art. 8.1.
vii. All recorded data relating to the free practice, qualifying or classification round must be made available to IMSA or PMNA.
viii. IMSA will deploy lap beacons in designated locations at each Event for all data systems and for all IMSA Sanctioned series, Individual team beacons are not permitted in any location on the circuit.
ix. The following units and channels will be utilized:
(i) Motec: channel code 9.99
(ii) PI 32 Channel Monster; set to channel code zero
(iii) PI 10 Channel Monster; set to channel code zero
(iv) AiM Optic Lap Transmitter

9.18.3. IMSA reserves the right to access stored data during the Event.

9.18.4. Telemetry

a. Any method of wireless transmission of data to or from the Car is prohibited, with the exception of:

i. Autonomous lap-time display on dash.

9.18.5. Wiring Loom

9.18.6. Sensors

9.18.7. Radio

a. Entrants may install a single two-way voice radio with car-to-pit communication capability in compliance with the corresponding Series Sporting Regulations.
b. Teams are required to monitor IMSA Race Control frequency-see Sporting Regulations 14.8.

9.18.8. Rear View Camera

9.18.9. Auxiliary Power Sources

ARTICLE 10. SERIES REQUIRED ELECTRONICS

10.1. Series Scrutineering Data System

10.2. Safety Light System

10.2.1. Cars must be equipped with the MSE Yellow Light Kit to indicate active flag status.

a. The Kit contains the following components:

i. Yellow Indicator Light
ii. Antenna
iii. Wiring Loom and Instructions

10.2.2. The Safety Light system must be installed and functioning during on-track activity.

a. The Yellow Indicator Light must be prominently installed within the cockpit, in clear line of sight of the driver.
b. Antenna Installation: The supplied antenna must be mounted:

i. On the Car roof
ii. Away from other antennae
iii. Following the diagram below (a ground plane is not required):

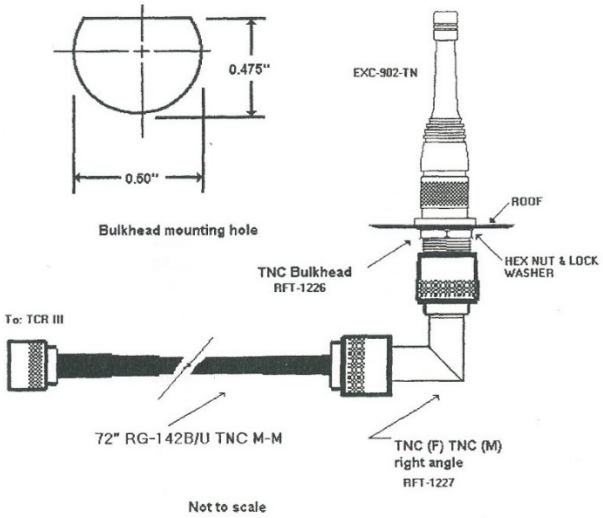

c. Wiring Loom Installation: The Wiring Loom has a flying lead input for +12 VDC and Ground to interface with additional wiring referenced in the installation instructions.

i. Entrants must supply additional wiring as required.

10.2.3. An activating receiver is available from IMSA during Safety Checks at each Event and remains the property of IMSA.

a. Entrants must surrender the receiver when required by IMSA.
b. A lost or damaged receiver is subject to a replacement fee referenced in the IMSA Accessories form

10.3. Driver ID System

10.4. Transponder System

10.4.1. Each car is to be fitted with an approved hard-wired timing transponder.

a. Must be fitted in the approved manner and location.
b. Must be fitted in the right front wheel well.

10.4.2. Cars may be equipped with the X2 Transponder System Kit.

a. Kit contains the following components:

i. X2 Transponder
ii. Isolation Mounts
iii. Motec Driver ID Module #RG OTC

b. Entrant must supply the following additional items:

i. X2 Transponder Mounting Bracket (available for purchase as listed in the IMSA Accessories Order Form).
ii. M4 Socket Head Cap Screw and washer.
iii. Driver ID Plugs

10.4.3. Female Driver ID plug(s), (i.e. Driver #1 through Driver #5) may be installed in the car cockpit or attached to the individual Driver's helmets.

a. Alternative installations must be approved by IMSA

10.5. Leader Light System

10.6. Back-lit Panel

Not Applicable

10.7. Pro-Am Light

Not Applicable+

10.8. In-Car Camera

10.8.1. Permitted

a. Camera and mounting must be approved by IMSA
b. IMSA reserves the right to impound any in-car camera footage for any purpose.
c. A Team may be required to fit and use cameras as assigned and provided by IMSA.
d. Team must execute and maintain a current media rights and usage license per IMSA RULES.

ARTICLE 11. REFUELING SYSTEM

11.1. Fuel Transfer

11.2. Pit Tank

11.3. Peripheral Connections

11.4. Refueling Hoses

11.5. Trolley

11.6. Boom

11.7. Refueling Restrictor

11.8. Level Sensor System

ILLUSTRATION 1: RIDE HEIGHTMEASUREMENT LOCATIONS (GROUND CLEARANCE)
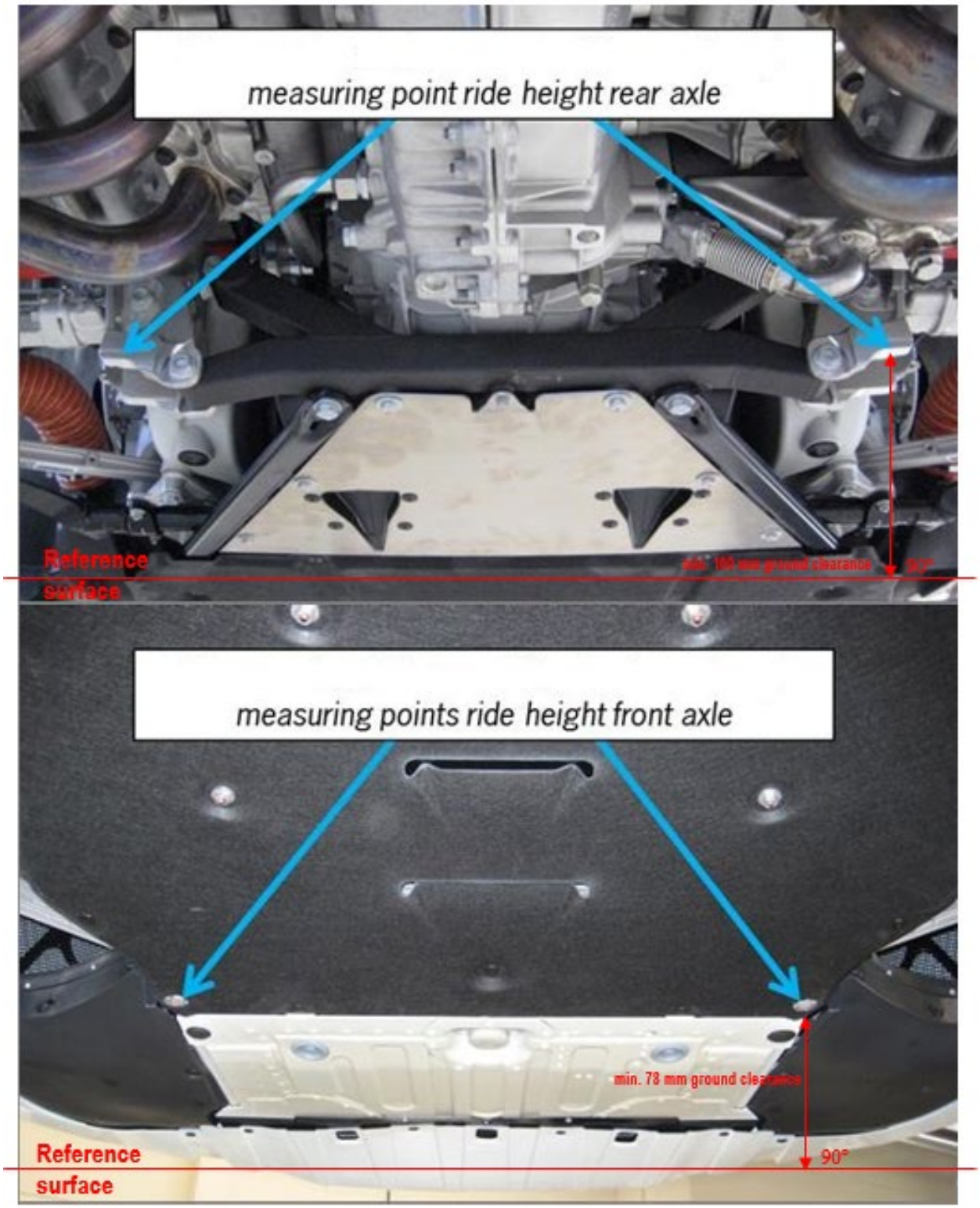
Model Year 2017 and Newer (991.2)