One Daytona Blvd.
Daytona Beach, FL 32114
P: +1 (386) 310-6500

IMSA TECHNICAL BULLETIN IMPC #19-01

To: All IMSA Michelin Pilot Challenge Participants

From: IMSA Competition

Date: 2 November 2018

Re: IMSA Michelin Pilot Challenge GS 2019 Technical Regulations

IMSA has published the Technical Regulations for the IMSA Michelin Pilot Challenge as of today's date in Blackline and Redline forms for the GS Class.

All cars will be held to these Technical Regulations for IMSA events.

After this date, changes to the IMSA Michelin Pilot Challenge Technical Regulations are issued via Technical Bulletin and an updated edition of the affected Technical Regulation(s) published, with an additional document showing the changes in red. The Blackline version is the official Regulations.

2019 IMPC Technical Regulations GS 11/02/18

2019 IMPC Technical Regulations GS REDLINE 11/02/18

Notable changes from the 2018 Regulations are as follows:

2.2. Balance of Performance Adjustment

2.2.1. To maintain competitive equivalency between Cars within the Class, and between Classes, IMSA uses the Balance of Performance process as outlined in Article 6 to mandate adjustments to the Specification.

a. Performance is evaluated using observed performance data; including, but not limited to, the IMSA Scrutineering data logger and official Timing and Scoring.

6.3. Adjustment Parameters

6.3.1. The following adjustments may apply:

a. Minimum mass
b. Engine restrictor and/or boost ratio change
c. Maximum fuel ~~cell~~ capacity
d. Assigned refueling restrictor diameter
e. Aerodynamic elements and/or settings
f. Other parameters as designated by IMSA

7.7. Fire Suppression

7.7.1. Extinguishing media must be compatible with all aspects and accessories of the fire suppression system.

a. Compliance with FIA 8865-2016 is ~~mandatory~~ recommended.

9.1. General (Vehicle Systems)

9.1.1. All Vehicle Systems and associated sub-systems are listed in this Article.

a. Where change to the~~se~~ Homologated Vehicle Systems is permitted, regulatory text is **bold and underlined**.
b. Where change to the~~se~~ Homologated Vehicle Systems is prohibited, regulatory text is light grey.
c. Advisory statements are in normal text.

9.4. Dimensions

9.4.1. General

a. IMSA's measurement instruments are the official measurement instruments.

9.4.5. ~~Ground Clearance~~ Minimum Ride Height

a. The minimum ~~ground clearance~~ ride height for all Car Models is defined via Balance of Performance Tables and associated Technical Bulletins.

b. ~~Ground clearance~~ Ride Height is measured at the points specified in the Homologation Document ~~across the complete underside of Car Model~~ during Technical Inspection.

9.10. Boost Management

9.10.4. Boost Calculation Method

a. Allowable events beyond the maximum boost pressure are calculated as:

i. Up to 7% over the maximum boost pressure, not to exceed 7% of the time duration for that lap.
ii. Total time over the 7% maximum boost pressure must not exceed 3% of the time for that lap.
iii. No single event beyond the maximum boost pressure may exceed two (2) seconds in duration.
iv. No single spike can exceed 125% of the maximum boost pressure.

b. Altitude compensation formula for turbocharged Cars:

i. Ambient pressure shall be published via Technical Bulletin on set up day prior to an Event.
ii. The barometric pressure reference for all Events is 1013 mbar.
iii. [Base Limit] * (1-[(1013 – Ambient Pressure)/1013]) = Event Boost
~~iv. [Base limit] * [1 – (Altitude / 1000) * 0.036]~~

c. ~~Altitude for Tracks~~:

~~i. Tracks not listed in the table below are not affected by the altitude compensation:~~

~~Tracks~~	~~Altitude (ft)~~
~~Lime Rock Park~~	~~550~~
~~Mazda Raceway Laguna Seca~~	~~830~~
~~Mid-Ohio~~	~~1375~~
~~Road America~~	~~980~~
~~Road Atlanta~~	~~975~~
~~Watkins Glen International~~	~~1600~~
~~Canadian Tire Motorsports Park~~	~~1100~~

d. Alternate altitude compensation method for cars without adaptable boost pressure

i. The following mass shall be added to the base weight of the Car per the following schedule:

~~Tracks~~	~~Mass Increase (kg)~~
~~Lime Rock Park~~	~~+15~~
~~Mazda Raceway Laguna Seca~~	~~+15~~
~~Mid-Ohio~~	~~+30~~
~~Road America~~	~~+20~~
~~Road Atlanta~~	~~+20~~
~~Watkins Glen International~~	~~+30~~
~~Canadian Tire Motorsports Park~~	~~+30~~

Event Bulletin Ambient Pressure	+ Mass
> 990 mbar	0
> 970 mbar	15 kg
< 970 mbar	30 kg

9.11. Drive System

9.11.1. General

a. Manufacturer seals must be respected

9.13. Fuel System

9.13.1. General

a. Maximum Capacity

i. The maximum fuel capacity for all Car Models is defined via Balance of Performance Tables and associated Technical Bulletins.
ii. The maximum fuel capacity is the total volume of fuel contained in the Car.

9.13.3. Fuel Cell

~~a. Maximum Capacity~~

~~i. The fuel cell maximum capacity for all Car Models is defined via Balance of Performance Tables and associated Technical Bulletins.~~

10.3. Driver ID System

~~10.3.1 Cars must be equipped with a Driver ID system to identify the active Driver piloting the Car.~~

~~a. Driver ID Kit contains the following components:~~

~~Three (3) Driver ID plugs~~
~~Transponder~~

~~10.3.2. Driver ID transponder system must be installed and functioning during Events.~~

~~a. Outside interference must not exceed those levels commonly used in the automotive industry, as described in 95/54/EEG.~~

~~b. Transponder must be installed:~~

~~In a vertical orientation~~
~~With appropriate thermal protection in an area where the temperature cannot exceed 50 ºC~~
~~Above non-conductive surfaces such as fiberglass or aramid panel~~

~~c. Transponder consumes less than 40 mA (10-30 VDC), and must:~~

~~Be a fused, 12-volt DC configuration~~
~~Meet the specifications defined by ISO 7637~~

~~d. Transponder connection cables must be installed with appropriate thermal protection against temperatures exceeding:~~

~~i. Black Cables: 150 ºC~~
~~ii. Blue Cables: 70 ºC~~

~~e. In cases where the cable installation requires severing the Driver ID transponder loom, the Entrant must:~~

~~Fit an appropriate connector~~
~~Ensure the integrity of the system connectivity is always maintained~~

~~f. Female Driver ID plug(s), (i.e. Driver #1 through Driver #5) may be installed inside the Car cockpit or attached to the individual Drivers' helmets.~~

~~Alternative installation types must be approved by IMSA.~~

~~g. Entrant is responsible for replacing a lost or damaged Driver ID Transponder.~~

~~Replacement cost is listed in the IMSA Accessories Order Form~~

~~i. Transponder and plugs must be tested and operate to the satisfaction of the Timing and Scoring Officials~~

10.3.3. Cars must be equipped with the Motec Driver ID Module # RG OTC

a. Available for purchase through Motec

10.3.4. Entrant must supply Driver ID Plugs

10.3.5. Female Driver ID plug(s), (i.e. Driver #1 through Driver #5) may be installed inside the Car cockpit or attached to the individual Drivers' helmets.

a. Alternative installations must be approved by IMSA.

10.3.6. Transponder and plugs must be tested and operate to the satisfaction of the Timing and Scoring Officials

10.4. X2 Transponder System

10.4.1. Installation of the X2 system must be in accordance with the Manufacturer submitted form added to the Technical Credential.

10.4.2. Cars must be equipped with the X2 Transponder System Kit

a. Kit contains the following components:

i. X2 Transponder
ii. Isolation Mounts
iii. Motec Driver ID Module # RG OTC

b. Entrant must supply the following additional item(s):

i. X2 Transponder Mounting Bracket (available for purchase as listed in the IMSA Accessories Order Form).
ii. M4 Socket Head Cap Screw and Washer.
iii. Driver ID Plugs

10.4.3. Female Driver ID plug(s), (i.e. Driver #1 through Driver #5) may be installed inside the Car cockpit or attached to the individual Drivers' helmets.

a. Alternative installations must be approved by IMSA.

10.4.4. Entrant is responsible for replacing a lost or damaged X2 Transponder.

a. Replacement cost is listed in the IMSA Accessories Order Form

10.4.5. Transponder and plugs must be tested and operate to the satisfaction of the Timing and Scoring Officials.

10.4.6. Transponder consumes less than 300 mA (10-15 VDC), and must:

a. Be a fused, 12-volt DC configuration
b. Meet the specifications defined by ISO 7637

10.5. Leader Light System

10.5.1. Cars must be equipped with LED leader light panels as follows:

a. Motec Leader Light Panels # PV0091
b. Motec Harness

10.5.2. Leader light system must be installed and functioning during the Event

a. System must be installed as per the Technical Credential

10.5.3. Leader Lights consume less than 4.5 A (10-15 VDC), and must:

i. Be a fused, 12-volt DC configuration
ii. Meet the specifications defined by ISO 7637

11.1. Fuel Transfer

11.1.2. Fuel transferred to the autonomous supply tank must be delivered by means of a hose fitted with a self-sealing connector (e.g. dry break, cam-lock) connected to the autonomous supply tank.

11.2. Pit Tank

11.2.2. Refueling tank height is measured from the top surface of the vessel, not including vent, cover plate or fasteners, ~~to the track surface where the refueling takes place.~~ at a distance of 1.25 meters from the outermost face of the pit wall

~~11.2.3. The Maximum refueling tank heights are:~~

~~i. 6.0 feet or as listed on the Balance of Performance Chart~~

b. The required refueling tank height is 2.0 meters with a tolerance of +0/-1.0 cm.
c. Once inspected by an IMSA Official the Autonomous Supply Tank and Trolley may not be moved until the conclusion of the race or upon an approved retirement via TIMS.

11.3. Peripheral Connections

11.3.1. Tanks must be equipped with the IMSA-specified peripheral connections between the tank outlet and the refueling hose.

a. Parts must be purchased from RPXpress and used unmodified:

Part Number	Part	Description
BSR-FR FN40	Outlet Flange	Bottom Tank 12-bolt housing
ATL-TF 147	12-Bolt Gasket	
BSR.FR.R.36GOLD	36.0mm Restrictor	Upper Restrictor (for Positive Seal to Elbow)
BSR-FR 1981	Bottom 80 deg. Elbow	Female Camlock x 2" Male
~~BSR-P5K56~~	~~Adapter~~	~~Adapter 2" Male to 1 ½" Camlock~~
BSR.P.5K56.SS	Restrictor Housing	Deadman Outlet, 2" Male to 1 ½" Camlock
BSR.P.5K.RPX.SS	Hose Coupler	1.5" OD barb to Deadman outlet
1 Deadman Valve:		
BSR-FR-R003	Deadman Valve (new design)	Stainless Deadman Valve
BSR-FR-R002	Deadman Valve (old design)	Brass Deadman Valve
~~Restrictor:~~		
~~BSR-FR-RXXX~~	~~Individual Restrictors~~	~~XX indicates restrictor diameter in mm~~

11.4. Refueling Hoses

11.4.1. Refueling/vent hoses must have one end equipped with a self-sealing connector to fit the autonomous supply tank outlet.

11.4.2. Refueling/vent hoses may be protected for the sole purpose of resisting abrasion damage.

a. Cover must be easily removable by means of full-length Velcro or zipper.
b. Cover must be non-reflective

11.4.3. Hose maximum inside diameter

a. Dual-Port systems must be less than 1.5 inches for all hoses.
b. Single-Port (coaxial) systems must be less than 1.5 inches for Refueling Hose and less than 75.0 mm for the vent hose

11.5. ~~Trolley~~ Tank Support Stand

11.5.1. The tank must be attached to one of the following:

a. To a trolley meeting the following requirements:

i. All tower components must be assembled without any degree of freedom in relation to the trolley.

~~11.5.2. The base of the trolley must:~~

ii. Have a surface area greater than two (2) square meters.
iii. ~~Be installed with~~ Utilize four (4) self-braking casters.
iv. Be ballasted with a weight exceeding that of the tank when filled with fuel.

b. Scissor style (X-brace) stand

11.7. Refueling Restrictor

11.7.1. During refueling, all fuel entering the Car must pass through the refueling restrictor.

11.7.2. Refueling Restrictor must meet the following criteria:

a. Material must be an aluminum alloy.
b. Must comply with the IMSA Fuel Restrictor Part Drawing at the end of these Technical Regulations

11.7.3. IMSA may adjust the refueling rig restrictor diameter and ~~refueling rig height~~ via Balance of Performance Tables and associated Technical Bulletins.

a. Refueling restrictors may be purchased from RPXpress (Phone: +1-828-428-0820 Email: lmcelwain@rpxpress.com).

11.7.4. Refueling Restrictors are sealed by IMSA Technical Officials.

a. Entrants must receive written approval from IMSA to remove seals following inspection, and seals must be replaced by IMSA Technical Officials prior to on-track activity.
b. The following bolts must be drilled for safety-wire sealing of the restrictor

i. Two (2) adjacent Bolt heads of the Restrictor Housing
ii. Two (2) Hinge Bolts (threaded section) of the Outlet Pipe Cam Lock
iii. Two (2) Lock Lever Arms of the Refueling Hose Cam Lock

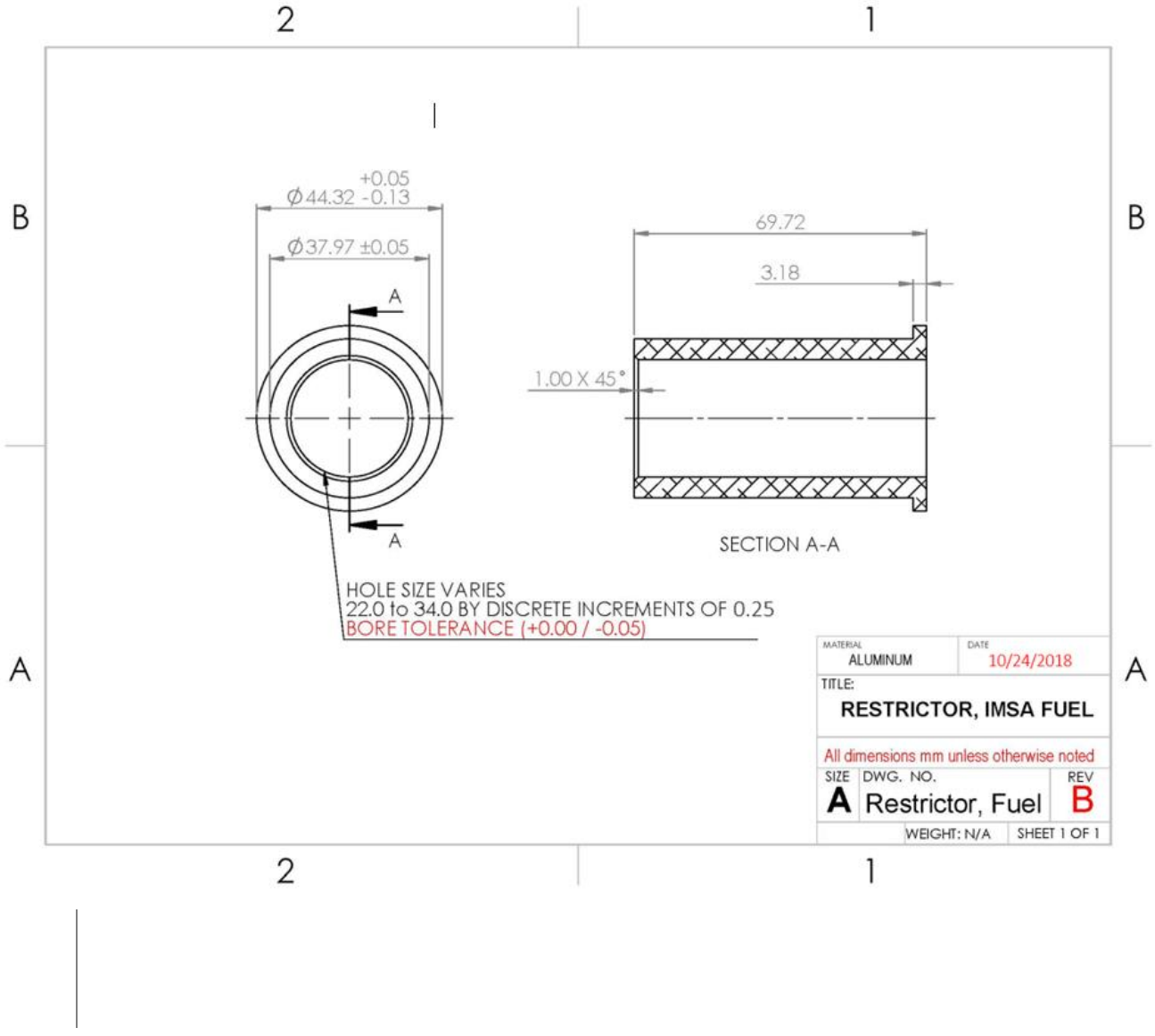
2
1
B
A
+0.05
Ø44.32 -0.13
Ø37.97 ±0.05
A
A
69.72
3.18
1.00 X 45°
SECTION A-A
HOLE SIZE VARIES
22.0 to 34.0 BY DISCRETE INCREMENTS OF 0.25
BORE TOLERANCE (+0.00 / -0.05)
MATERIAL
ALUMINUM
DATE
10/24/2018
TITLE:
RESTRICTOR, IMSA FUEL
All dimensions mm unless otherwise noted
SIZE
A
DWG. NO.
Restrictor, Fuel
REV
B
WEIGHT: N/A
SHEET 1 OF 1