2022 TECHNICAL REGULATIONS

Revision Date: 11/16/2021

Series:

IMSA WEATHERTECH SPORTSCAR CHAMPIONSHIP

Classes:

GRAND TOURING DAYTONA PRO

GRAND TOURING DAYTONA

Sanctioned by:

INTERNATIONAL MOTOR SPORTS ASSOCIATION

One Daytona Blvd.
Daytona Beach, FL 32114
(O) +1 (386) 310-6500
(F) +1 (386) 310-6695
www.imsa.com

Table of Contents

Foreword: 3
ARTICLE 1. DEFINITIONS SPECIFIC TO THE TECHNICAL REGULATIONS 6
ARTICLE 2. TECHNICAL PHILOSOPHY 7
2.1. Technical Eligibility 7
2.2. Changes 7
2.3. Conflict Resolution 7
2.4. Final Authority 7
2.5. Conditions for Use of a Specific Homologation 7
ARTICLE 3. TECHNICAL ~~ELIGIBILITY~~ TESTING AND VERIFICATION 8
3.1. Reference Components 8
3.2. Technical ~~Eligibility~~ Testing 8
ARTICLE 4. BALANCE OF PERFORMANCE 8
4.1. Balance of Performance 8
ARTICLE 5. SAFETY 8
5.1. Driver Safety Harness System 8
5.2. Seat 9
5.3. Driver Containment Nets 9
5.4. Protective Padding 10
~~5.5. Protective Shielding~~ 10
5.6. Master Electrical Switches 10
5.7. Fire Suppression System 10
ARTICLE 6. DEFINITION OF CLASS 11
6.1. Grand Touring Daytona (GTD) 11
ARTICLE 7. VEHICLE SYSTEMS 11
7.1. General 11
7.2. Modifications to the Specification 12
7.3. Servicing, Repair, and Replacement 12
7.4. Dimensions 12
7.5. Chassis 13
7.6. Driver Interface 13
7.7. Bodywork 13
7.8. Aerodynamic Elements 14
7.9. Engine System 14
7.10. Boost Management 15
7.11. Drive System 17
7.12. Cooling System 18
7.13. Fuel System 18
7.14. Brake System 18
7.15. Steering System 19
7.16. Suspension System 19
7.17. Wheels & Tires 19
7.18. Electronics 20
ARTICLE 8. SERIES REQUIRED ELECTRONICS 20
8.1. Series Scrutineering Data System 20
8.2. Safety Light System 22
8.3. Driver ID System 23
8.4. X2 Transponder System 23
8.5. Leader Light System 24
8.6. Back-lit Panel 24
8.7. Pro-Am Light (GTD) 24
8.8. In-Car Camera 24
8.9. Tire Pressure Monitoring System 24
ARTICLE 9. REFUELING SYSTEM 25
9.1. Fuel Transfer 25
9.2. Pit Tank 25
9.3. Peripheral Connections – GTD PRO 25
9.4. Peripheral Connections - GTD 27
9.5. Refueling Hose 28
9.6. Tank Support Stand 28
9.7. Boom 29
9.8. Refueling Restrictor 29
9.9. Autonomous Tank Sensor System – GTD PRO 30
9.10. Level Sensor System - GTD 31

Foreword:

For all Members, the IMSA RULES of the International Motor Sports Association establish the foundation for the organization and conduct of all IMSA Sanctioned Events. The IMSA RULES take effect immediately upon publication.

The purpose of the RULES is to: (i) promote safety, the sport of automobile Competition and IMSA, (ii) enhance Competition, (iii) ensure the quality, fairness and integrity of the IMSA programs and operations and (iv) achieve prompt finality in the Competition results ("**Purpose**").

ALL MEMBERS ARE REQUIRED TO REVIEW THESE IMSA RULES CAREFULLY.

The **IMSA RULES** consist of following three (3) sections and the Event Supplementary Regulations (**SR**):

- The Technical Regulations, which outline the rules and regulations for the specific cars and equipment. The Technical Regulations may be modified or changed at any time by the publication of a Technical Bulletin, amending the Technical Regulations.

- The IMSA Sporting Regulations (**ISR**), which concern Competitor and Event procedures, as well as guidelines for the safe and uniform operation of the sport. The ISR may be modified or changed at any time by the publication of a Competition Bulletin, amending the ISR.

- The Series Supplementary Regulations (**SSR**) that provides Series-specific information about each IMSA Series. The SSR is integrated into the ISR and are designated with "(SSR)" next to the Paragraph title. The SSR may be modified or changed at any time by the publication of a Competition Bulletin, amending the SSR.

Any portion of the RULES may be modified though Bulletins (Competition Bulletins and Technical Bulletins, respectively) and takes force when published. Once published, the Bulletin shall take precedence over the applicable portion of the RULES. Additionally, the RULES may be modified for an Event by the Race Director through the mandatory briefing instructions.

HOW TO READ THE RULES

IMSA Technical Regulations follow a common philosophy across all Classes. The IMSA Technical Regulation philosophy can be summed in the following concepts:

- Cars are constructed and regulated to a controlled standard, the vehicle Homologation.
- Modifications to the Car are not permitted unless specifically stated in the applicable class's Technical Regulations.
- The Car, at all times, must adhere to:
    - The current Homologation Document(s) and valid extension documents (e.g., EVO).
    - The Manufacturer's or Constructor's Parts Manual.
    - Manufacturer submitted and IMSA approved declarations (where applicable).
    - The IMSA Technical Regulations for the Class
- Normal adjustment of the Car is permitted as defined by the applicable Car's Homologation and Class's Technical Regulations.
- Repair of the Car, parts, and components is permitted, provided it serves no additional purpose other than the repair itself. All such repairs must meet all Constructor / Manufacturer specifications and regulatory requirements.

(cont.)

Modifications by an Entrant to parts, systems, and/or components of the Car is not permitted for any reason. An Entrant wishing to perform any modification(s) must present modification(s) to the applicable Manufacturer or Constructor for formal approval from the applicable Homologating Authority for the Class. Entrants are not permitted to work directly with a Homologating Authority(s).

Entrants must have a current copy of the applicable Homologation for their Car Model at all times, as well as full access to the Manufacturer's / Constructor's Part Manual. Both of these documents together clearly identify the compliant specification of the Car and will be used as reference materials for both the Entrant and IMSA. A copy of the Homologation may be provided by the applicable Manufacturer / Constructor or purchased from the Homologating Authority.

IMSA's regulations work in conjunction with Homologation regulations from a Homologating Authority. This sometimes creates conflicts across the various regulation sets. Often the Homologating Authority has a combined set of Technical and Homologation regulations.

The hierarchy of these various regulations applies in descending order is as follows:

1. IMSA Class Technical Regulations and Bulletins
2. These IMSA Technical Regulations shall govern in any case where a conflict exists with the Homologation Regulations and Documentation.
3. Homologation Authority Technical Regulations and corresponding Homologation Form & Parts Book

Example 1: Incorrect process

A Team has found that a suspension part of the Car is prone to failure when going over large bumps. The Team chooses to resolve the problem on their own and modifies the part with components made in their own shop, which are not in the Homologation or Parts Manual of the Car. IMSA Technical Staff find this modification during a post-Race inspection. IMSA finds that the car is not in the approved configuration and the Entrant is penalized.

Example 2: Correct process

A Team suspects a part on the Car may be prone to failure during longer races. The Team therefore informs their Manufacturer or Constructor representative of their concern. The Manufacturer or Constructor agrees that a modification or redesign is appropriate and submits a written proposal with supporting documentation to the Homologating Authority for review. Upon approval the Homologation documents are updated and distributed for equitable customer awareness and part implementation.

Homologation Authority for the Class:

Class	Homologating Authority
GTD and GTD PRO	FIA
(Corvette C8.R) GTD PRO	IMSA

EXECUTIVE LEADERSHIP MASTHEAD

John Bishop* / Bill France, Sr.*	Founders – IMSA
Dr. Don Panoz*	Legacy Vice Chairman
Jim France	Chairman
Lesa Kennedy	Director
Ed Bennett	Chief Executive Officer
John Doonan	President
Tracey Lesetar-Smith	Director and Legal Counsel
David Pettit	Senior Vice President, Marketing
Simon Hodgson	Vice President, Competition
Brandon Huddleston	Vice President, Partnership Marketing and Business Development

*Deceased

ARTICLE 1. DEFINITIONS SPECIFIC TO THE TECHNICAL REGULATIONS

1.1.1. **Car** means a singular representation of a Car Model ~~possessing a Technical Credential~~, entered by an Entrant in an Event.

1.1.2. **Car Model** means a specific model of a vehicle constructed by an IMSA-recognized Manufacturer Partner, and intended for Competition.

1.1.3. **Class** means a category for Cars sharing a common set of Homologation Regulations and differentiated from others by type of Car Model.

1.1.4. **Competition** means a contest of competitive nature in which a Car takes part during an Event and results of which Competition are published.

1.1.5. **Constructor** means an entity that designs and builds race car chassis.

1.1.6. **Entrant** means an entity or person who has entered a Car that has been accepted for Competition and holds an IMSA Membership in the capacity of an Entrant or Entrant/Driver.

1.1.7. **Event** means an IMSA Sanctioned motorsport activity. It includes the designated Race as well as all periods for registration, inspections, practice Sessions, qualifying Sessions, racing, pre- and post-Race activities and inspections, and rain or postponed dates related thereto.

1.1.8. **Homologate** means to execute the Homologation Process.

1.1.9. **Homologated** means a Car Model approved through the Homologation Process.

1.1.10. **Homologation** means the concept of all things associated with Homologation Authority approval via the Homologation Process.

1.1.11. **Homologation Authority** means an entity with the authority to Homologate**.**

1.1.12. **Homologation Documentation** means all files, documents, information, and communication associated with the issuance of official approval of Homologation.

1.1.13. **Homologation Identifier** means the unique identifier (generally including a string of characters identifying the Category or Class of Homologation followed by a sequential number assigned to the Car Model) serving as a reference to the official approval of Homologation, assigned by the Homologation Authority.

1.1.14. **Homologation Process** means all procedures associated with petitioning a Homologation Authority for approval that a Car Model complies with the Homologation Regulations.

1.1.15. **Homologation Regulations** means a set of technical requirements and criteria used to design, construct, and document a Car Model intended for racing in a specific category or class of racing.

1.1.16. **Manufacturer** means a Manufacturer Partner constructing an approved Car Model.

1.1.17. **Manufacturer Partner** means a recognized IMSA Official Automotive Partner.

1.1.18. **Specification** means all technical characteristics of the Car Model defined by the Homologation and Technical Catalog.

1.1.19. **Specific Homologation** means the Homologation specific to a particular Car Model.

1.1.20. **Technical Catalog** means IMSA's collection of data and documents supporting a Car Model.

~~1.1.21. **Specific Technical Credential** means the Technical Credential specific to a particular Car Model.~~

~~1.1.22. **Technical Credential** means the concept of all things associated with IMSA approval via the Technical Credential Process.~~

~~1.1.23. **Technical Credential Documentation** means all files, documents, information, and communication associated with the Technical Credential Process.~~

~~1.1.24. **Technical Credential Identifier** means the unique identifier that serves as a reference to the Technical Credential granted by the IMSA. Example: IMSA-GTLM-20170101-[GTE-0XX].~~

~~1.1.25. **Technical Credential Process** means all procedures associated with petitioning IMSA for approval that a Car Model is Technically Eligible.~~

~~1.1.26. **Technical Eligibility Form** means the form which documents the Specific Technical Credential.~~

1.1.27. **Technically Eligible** means conforms to all technical requirements and criteria defined by these Technical Regulations.

ARTICLE 2. TECHNICAL PHILOSOPHY

2.1. Technical Eligibility

~~2.1.1. Car Models Technically Eligible for participation in IMSA Events are issued a Technical Credential Identifier.~~

2.1.2. Cars representing a Car Model must always respect the Specification.

2.1.3. To be ~~issued a Technical Credential Identifier~~ eligible for participation in this Class, a Car Model must:

a. Be a Car Model constructed by an IMSA-recognized Manufacturer Partner.
b. Hold a valid Homologation ~~conforming to the Homologation Regulations and Homologation Documentation specific to the Class~~, approved and issued by an IMSA-recognized Homologation Authority.
~~c. Successfully complete the IMSA Technical Credential Process.~~

2.1.4. IMSA is the sole authority to define the Technical Eligibility of a Car Model and issue the Technical Credential.

2.2. Changes

2.2.1. Changes to the Specification are prohibited, unless explicitly authorized by IMSA.

2.2.2. Manufacturers alone are permitted to petition IMSA to change the Specification; requests by Entrants are not recognized.

2.3. Conflict Resolution

2.3.1. These IMSA Technical Regulations shall govern in any case where a conflict exists with the Homologation Regulations and Documentation.

2.4. Final Authority

2.4.1. IMSA is the Final Authority with respect to these Technical Regulations.

2.5. Conditions for Use of a Specific Homologation

2.5.1. At all times during IMSA-sanctioned Events it is the Entrant's responsibility to ensure the configuration of the Car Model represents the Homologation components of the Specification; including:

a. As-Homologated Configuration
b. As-Delivered Configuration
c. Parts Manual
d. Homologation Extension Form Configuration

2.5.2. The original, As-Homologated Configuration of the Car Model must not be modified unless permitted by these Technical Regulations.

2.5.3. The As-Delivered Configuration of a Car must respect the as-received configuration from the Car Model Manufacturer, unless permitted by these Technical Regulations.

2.5.4. The Parts Manual is the official parts catalogue for the Car Model as defined by the Car Model Manufacturer or Constructor:

a. Specific parts listed in the Parts Manual must be used on all representations of a Car Model unless permitted by these Technical Regulations.

2.5.5. To be eligible for use in any IMSA-sanctioned Event, modifications detailed in Homologation Extension Forms must:

~~a. Comply with these Technical Regulations.~~
b. Be approved by, or have initiated the process to obtain approval from, the Homologation Authority, and appended to the Car Model Homologation.
c. Be approved by IMSA.
d. Be available to all Entrants of the relevant Homologated Car for the next Event.

ARTICLE 3. TECHNICAL ~~ELIGIBILITY~~ TESTING AND VERIFICATION

3.1. Reference Components

3.1.1. IMSA may request Manufacturers submit reference components, tooling, and/or templates to the IMSA Technical Department ~~support the Technical Credential process.~~

a. IMSA may retain these components without compensation.

3.1.2. Manufacturers are responsible for all costs as related to submission of reference components.

3.1.3. Fees may apply.

3.2. Technical ~~Eligibility~~ Testing

3.2.1. ~~Any~~ Testing conducted by IMSA ~~to support the Technical Credential Process~~; may be performed including, but not limited to:

a. Restrictor Flow
b. Engine Dyno
c. Wind Tunnel
d. On-track Testing
e. Fuel Delivery Testing
f. Fuel Consumption Testing

3.2.2. Testing and associated costs are the responsibility of the applicable Manufacturer or Constructor.

ARTICLE 4. BALANCE OF PERFORMANCE

4.1. Balance of Performance

4.1.1. IMSA may, at its discretion, utilize an adjustment method to maintain competitive equivalency between Cars within each Class, and between Classes.

a. Details of the Balance of Performance Process are described in Attachment 2 of the applicable Sporting Regulations.

4.1.2. Technical Bulletins are an extension of these Regulations and part of the Rules.

4.1.3. Providing false or intentionally misleading information is a breach of these Technical Regulations.

ARTICLE 5. SAFETY

5.1. Driver Safety Harness System

5.1.1. Cars must be equipped with a minimum 6-point Driver safety harness with a valid label demonstrating compliance with one of the following standards:

a. FIA Standard 8853-1998: FIA Safety Harnesses Standard

i. FIA Technical List #24: Harnesses Homologated by the FIA according to the FIA Standards 8853/98 and 8854/98
ii. Permitted until December 31, 2022

b. FIA Standard 8853-2016: Safety Harnesses

i. FIA Technical List #57: Harnesses Homologated according to the FIA Standard 8853-2016
ii. Mandatory on Car Models Homologated from 2019

~~c. SFI Specification 16.5: Stock Car Driver Restraint Assemblies~~

~~i. Specification~~
~~ii. Manufacturers~~

~~d. SFI Specification 16.6: Advanced Motorsport Driver Restraint Assemblies~~

~~i. Specification~~

~~ii. Manufacturers~~

5.1.2. Installation must be performed in accordance with instructions provided by the system supplier and/or manufacturer.

a. Belt components must be installed at each Homologated anchor point to prevent accidental release or opening.
b. Individual belt straps must be independent; any method or attempt to combine individual straps is prohibited.
c. Elastic retention straps are prohibited on shoulder belts.

5.1.3. Harnesses must be replaced at the request of IMSA, or whenever the following conditions occur:

a. Expiration:

i. FIA Homologated: Immediately following December 31st of the year printed on the label.
~~ii. SFI Certified (punched/cut label): Two years from the date as stated on label. If label is not properly "cut" by the manufacturer or their representative, the date for expiration shall be January 1st of the earliest year printed on the label + two years.~~
~~iii. SFI Certified (non-punched label): On June 30th or December 31st: of the year identified as the date for expiration.~~

b. Damage:

i. Following a severe collision.
ii. Webbing is cut or frayed, or weakened due to actions of chemicals or sunlight.
iii. Buckles are bent, deformed, rusted, or improperly functioning.

5.1.4. Entrants are responsible for ensuring the Driver safety harnesses and all associated components are properly labeled, installed, used, and maintained.

5.1.5. Belt components must be used as designed by the manufacturer ~~and tested by SFI or FIA.~~ It is prohibited to mix belt components between manufacturers or certifications. ~~to include~~:

~~a. Belt components from different manufacturers.~~
~~b. Belt components certified by SFI and FIA.~~

5.2. Seat

5.2.1. As homologated.

5.3. Driver Containment Nets

5.3.1. Cars must be equipped with center, and Driver-side containment nets with a valid label demonstrating compliance with one of the following:

a. FIA Standard 8863-2013: Racing Nets

i. FIA Technical List #48: Racing Nets Homologated according to the FIA Standard 8863-2013

~~b. SFI Specification 37.1: Roll Cage Nets~~

~~i. Specification~~
~~ii. Manufacturers~~

5.3.2. Installation requirements:

a. Supplier and/or manufacturer installation instructions must be respected.
b. Horizontal webbing must be oriented towards the Driver.
c. When secured at anchor points, nets must be:

i. Oriented parallel to the Car centerline.
ii. Located with minimal gap to the Driver's helmet.

d. Signage or equipment may be attached to nets provided:

i. The designed purpose of the net is respected.
ii. Visibility over and/or through the net is unobstructed.

5.3.3. Containment nets must be replaced prior to the expiration date:

a. FIA Homologated: Immediately following December 31st of the year printed on the label.

~~b. SFI Certified (punched/cut label): Two years from the date as stated on label. If label is not properly "cut" by the manufacturer or their representative, the date for expiration shall be January 1st of the earliest year printed on the label + two year.~~

~~c. SFI Certified (non-punched label): On June 30th or December 31st: of the year identified as the date for expiration.~~

5.4. Protective Padding

5.4.1. Cars must be equipped with non-flammable protective padding with a valid label demonstrating compliance with one of the following standards:

a. FIA Standard 8857-2001: FIA Roll Cage Padding Standard

i. FIA Technical List #23: Roll Cage Padding Homologated by the FIA

b. SFI Specification 45.1: Roll Cage Padding

i. Specification
ii. Manufacturers

5.4.2. Installation requirements:

a. Padding must be located to protect the Driver (body and/or helmet) against direct contact with the safety cage in a collision.
b. Protective padding must be securely affixed to prevent rolling or displacement.

~~5.5. Protective Shielding~~

~~5.5.1. Cars must be equipped with shielding to protect the Driver against contact with cockpit equipment in a collision.~~

~~5.5.2. Installation requirements:~~

~~a. Installations must not impact cockpit exit.~~
~~b. Installations of protective shielding must use fire-resistant materials and if impact padding is used it must comply with FIA 8857-2001, SFI 45.1 or SFI 45.2.~~
~~c. Installations must be presented to and approved by IMSA at the time of technical inspection.~~

5.6. Master Electrical Switches

5.6.1. As homologated.

5.6.2. Systems must remain functional during any on track activity or at the request of IMSA.

5.6.3. Interior and exterior master switches must be clearly identified by a self-reflective symbol of a red spark surrounded by a white-edged, blue triangle with a base greater than 30 mm.

5.7. Fire Suppression System

5.7.1. As Homologated ~~Cars must be equipped with a fire extinguisher system with a valid label demonstrating compliance with one of the following standards:~~

~~a. FIA Standard for plumbed-in Fire Extinguisher Systems in Competition Cars (1999):~~

~~i. FIA Technical List #16: Extinguisher Systems Homologated by the FIA~~

~~b. FIA Standard 8865-2015: Plumbed-in and Hand-Held Fire Extinguisher Systems~~

~~i. FIA Technical List #52: Plumbed-in Fire Extinguisher Systems according to FIA Standard 8865-2015~~

~~c. SFI Specification 17.1: On Board Fire Suppression Systems~~

~~i. Specification~~
~~ii. Manufacturers~~

~~5.7.2. Extinguishing media must be compatible with all aspects and accessories of the fire suppression system.~~

~~a. Compliance with FIA 8865-2016 is mandatory.~~
~~b. All system components must be used and serviced per manufacturer specifications.~~

~~5.7.3. System must be securely mounted.~~

~~a. The following must be visible without the use of photography, tools, or seat removal:~~

~~i. Pressure gauge (if present)~~
~~ii. Date of manufacture~~
~~iii. Next required service date~~

~~b. Nozzles must not point directly at the Driver's face~~

~~5.7.4. System must include an exterior activation mechanism proximal to the exterior master electrical switch at (or near) the base of the left side A-Pillar.~~

~~a. Exterior activation mechanism must be located such that emergency responders can activate with a single action:~~

~~i. Using a gloved finger, or tools such as a hook.~~
~~ii. Unencumbered by bodywork, windscreen wipers, or any equipment that requires multiple actions.~~

~~b. A method for preventing activation of the exterior activation mechanism:~~

~~i. Must be enabled when the Car is in Technical Inspection, in the Paddock, or located near large crowds, such as during pre-Race activities.~~
~~ii. Must be removed prior to participation in on-track activity.~~

5.7.5. Identification

a. Exterior activation mechanism must be marked with a self-reflective symbol with a red edge surrounding a red "E" inside a white circle at least 100 mm in diameter.
b. The interior fire activation switch, located in cockpit, must be marked with an appropriately sized decal of a red "E" inside a white circle.

5.7.6. Inspection

a. IMSA may require removal of the fire bottle for Technical Inspection.
b. Entrant is responsible to demonstrate proper system function of the interior and exterior fire suppression activation mechanisms, using the "test" mode if present.

ARTICLE 6. DEFINITION OF CLASS

6.1. Grand Touring Daytona (GTD)

6.1.1. Class Structure: Grand Touring Daytona Cars compete in the GTD Class of the IMSA WeatherTech Sportscar Championship (IWSC).

6.1.2. Eligibility Requirements: To be eligible for participation in the Class, a Car Model must respect the Specification defined by the Homologation and Technical Eligibility requirements:

a. Homologation:

Homologation Authority:	Federation Internationale de l'Automobile (FIA)
Homologation Specification:	FIA Group GT3 (GT3)
Homologation Regulations:	FIA Technical Regulations for Grand Touring Cars (Group GT3)
Homologation Authority:	International Motor Sports Association (IMSA) (re: Corvette C8.R)
Homologation Specification:	FIA Group GT3 (GT3), ACO GTE (as determined by IMSA) (re: Corvette C8.R)

ARTICLE 7. VEHICLE SYSTEMS

7.1. General

7.1.1. All Vehicle Systems and associated sub-systems are listed in this Article.

a. Where change to the Homologated Vehicle Systems is permitted, regulatory text is **bold and underlined**.
b. Where change to the Homologated Vehicle Systems is prohibited, regulatory text is light grey.
c. Advisory statements are in normal text.

7.2. Modifications to the Specification

7.2.1. Entrants are permitted to execute the following changes to parameters defined by the Homologation component of the Car Model Specification, provided these Technical Regulations, all current Technical Bulletins, and the Technical Credential are fully respected:

a. Adjust component settings defined as adjustable.
b. Replace components with parts defined as optional.

7.2.2. Manufacturers must make any declarations listed in these Technical Regulations in the Technical Eligibility Form.

7.2.3. Further authorization to modify the Specification and/or As-Delivered Condition is granted via the following formal communication methods:

a. Published IMSA Technical Bulletin
~~b. Approved updates to the IMSA Technical Eligibility Form~~
c. IMSA Technical Committee Bulletin

7.2.4. Informal and/or verbal communication is not considered valid authorization.

7.3. Servicing, Repair, and Replacement

7.3.1. All servicing or repair must be made in good faith to restore the Car and all components to their originally intended form and function as defined by the Specification.

7.3.2. Entrants are permitted to replace damaged or worn components provided these Technical Regulations are respected.

7.4. Dimensions

7.4.1. General

a. IMSA's calibrated measurement instruments are the official measurement instruments.
b. Scrutineering measurement(s) are taken with the applicable dry-type tire set installed.
   i. Tire compound per the applicable Event SR.
c. Tire pressure shall be set at 30.0 psi (±0.5 psi) for scrutineering measurement(s).

7.4.2. Reference Surface

a. The flat floor reference surface of the Car is measured to the plane of the Technical Inspection surface plate.

7.4.3. Mass

a. The minimum mass for all Car Models is defined via Balance of Performance Tables and associated Technical Bulletins.
b. Car mass is measured as-raced minus Driver and Fuel using the IMSA scales during Technical Inspection.

7.4.4. Ballast

a. Entrants are permitted to add or remove ballast to Homologated BoP ballast location to achieve minimum mass:
   i. Ballast must be in plate or panel form.
   ii. Addition or removal of ballast during the Race is prohibited.

~~b. Entrants using Cars without specific Homologated locations must:~~
   ~~i. Locate all ballast inside the cockpit in the passenger's location.~~
   ~~ii. Secure all ballast per FIA Article 253-16 in both dimensions and characteristics of fixation methods.~~
   ~~iii. Design fixations such that tools are required for its removal.~~

7.4.5. Ground Clearance

a. The minimum ground clearance for all Car Models is defined via BoP Tables and associated Technical Bulletins.
b. Ground clearance is measured across the complete underside of Car Model during Technical Inspection.

7.4.6. Overall Dimensions

7.5. Chassis

7.5.1. General

a. Entrants are permitted to execute minimum modifications for the installation of approved components.

i. All modifications must be approved by IMSA.

7.6. Driver Interface

7.6.1. General

a. Entrants are permitted to install a driver hydration system.

i. Installations must be approved by IMSA.
ii. System must not serve any additional purpose.

7.6.2. Steering Wheel

a. Entrants are permitted to add, and/or modify the shape of, steering wheel grips.

7.6.3. Pedal Box

a. Entrants are permitted to apply non-slip adhesives to the surface of driver pedals.

7.6.4. Shifting Mechanism

7.6.5. Driver Adjustable Components

7.6.6. Driver Cooling Systems

a. Entrants are permitted to install a maximum of two (2) driver cooling systems, i.e. cool suits.

i. Driver cooling systems must use non-flammable refrigerant (e.g. R134a, water).

b. Installations must meet the following conditions:

i. The mounting location and installation for the primary system is unrestricted provided it serves no purpose other than retaining the cooling system in the event of a collision.
ii. Any secondary driver cooling system must be mounted on the top of the ballast box.
iii. All driver cooling system components must be securely mounted.
iv. The use of hook and loop fasteners (Velcro) is prohibited.

c. Entrants are permitted to install Driver Ventilation Ducts

i. A NACA duct is permitted to be installed on the side window, rear quarter window, OR the rear window for the purpose of cooling the driver.
ii. Maximum of 1 per side with 2 ducts permitted per car.
iii. Maximum cutout area of 26 cm x 16 cm.
iv. No duct shall break the outward plane of the surface on which it is installed.
v. Ducts must be translucent.
vi. Duct and/or hoses must not impede cockpit exit or driver's visibility.

7.7. Bodywork

7.7.1. General

a. The following films are permitted to be added to the front windscreen:

i. Tear-offs
ii. Anti-fog

7.7.2. Bodywork Seams

a. Entrants are permitted to apply tape or vinyl around refueling receptacle seams and/or rear wing end fence adjustment holes.

7.7.3. Decals

a. Entrants are permitted to apply removable die cut sponsorship decals with the approval of IMSA.

b. Windows must remain free of decals and/or tint unless required by IMSA

7.7.4. Headlights

a. GTD Cars must have yellow headlight lenses.

b. GTD-PRO cars must have clear headlight lenses.

7.8. Aerodynamic Elements

7.8.1. General

7.8.2. Splitter

7.8.3. Dive Planes

7.8.4. Body Gurney

7.8.5. Wings

7.8.6. Floor

7.8.7. Friction Blocks

7.8.8. Diffuser

7.9. Engine System

7.9.1. General

a. Manufacturer seals must be respected

7.9.2. Engine

7.9.3. Oiling System

a. Approved lubricants are permitted to be utilized.

7.9.4. Lambda

a. The lambda value for all Car Models is defined in the applicable Homologation and distributed by means of Balance of Performance Tables and associated Technical Bulletins.

b. The lambda value must be respected when participating in on-track activity.

7.9.5. Engine RPM

a. The maximum engine RPM limits for all Car Models are defined via Balance of Performance Tables and associated Technical Bulletins.

b. The RPM limit is considered exceeded when either of these conditions occur:

i. Engine RPM exceeds RPM limit for more than 250 ms, and actual pedal position is greater than 60% of the maximum

ii. Engine RPM is more than 1.0% over RPM limit for more than 100 ms, and actual pedal position is greater than 60% of the maximum, i.e. an 8000 RPM limit is exceeded when RPM is greater than 8080 for more than 100 ms while actual pedal position is greater than 60%.

7.9.6. Intake

a. The assigned inlet air restrictor diameter(s) for all Car Models is defined via Balance of Performance Tables and associated Technical Bulletins.

i. All air entering the engine must pass through the restrictor.
ii. Restrictors must be the FIA approved design.
iii. Restrictor designs must be submitted by the Manufacturer and included in the applicable Car Model's IMSA Technical Credential.

b. Intake air restrictors may be sealed by IMSA Technical Officials during Pre-Event Technical Inspection.

i. Entrants must receive approval from IMSA to remove seals following inspection, and seals must be replaced by IMSA Technical Officials prior to on-track activity.

c. Manufacturers are permitted to declare an alternative air filter via the Technical Eligibility Form

i. Declared filter must be approved by IMSA in writing at least seven (7) days before first use.
ii. Entrants must use the manufacturer declared air filter.

7.9.7. Exhaust

7.9.8. Turbo

7.9.9. Engine Control Unit (ECU)

7.9.10. Engine Transportation Crate

a. Entrant must have immediately available a crate sufficient to securely and safely package and ship an engine.

7.10. Boost Management

7.10.1. Maximum Boost Pressure

7.10.2. Boost Pressure Ratio

a. The table of maximum boost pressure ratio versus engine RPM for applicable Car Models is defined via Balance of Performance Tables and associated Technical Bulletins:

i. All values between the tabulated set points defined via the table are interpolated linearly.

7.10.3. Boost Control Strategy Inputs

Parameter	Description	TB*
Maximum Boost Pressure Ratio (Max Pboost Ratio)	Curve of Maximum Boost Pressure Ratio as a function of Engine RPM	TB
Actual Boost Pressure (Pboost)	Intake manifold pressure measured in accordance with these Technical Regulations In case of two separate intake manifolds, the average of the two manifold pressure sensors will be referenced	
Filtered Boost Pressure (Pboost Filtered)	Exponentially weighted moving average of Actual Boost Pressure. Defined as: $(\text{Pboost Filtered})_n = (\text{Pboost})_n * (Ce_{Filt}) + (\text{Pboost Filtered})_{n-1} * (1 - Ce_{Filt})$	
Filter Coefficient (Ce_{Filt})	Coefficient that defines weighting for Filtered Boost Pressure	
Barometric Pressure Reference	~~Absolute barometric pressure reading will be recorded by IMSA's calibrated barometer at noon on setup day of a race event~~ ~~The official reading will be promptly released in a Technical Bulletin and is in effect for the remainder of the event~~ Absolute barometric pressure reading will be measured by IMSA and transmitted to IMSA Scrutineering Data System via telemetry	TB
Actual RPM	Unfiltered RPM value measured in accordance with these Technical Regulations	
Actual Throttle	Engine throttle position measured in accordance with these Technical Regulations In case of two engine throttles, the maximum value of the two throttle positions is referenced	
RPM Threshold	An RPM threshold which is used as a condition	
Resultant Boost	(Pboost Filtered) – (Barometric Pressure Reference) * (Max Pboost Ratio)	
Integral	Area under the Resultant Boost as a function of time curve in units of pressure-time	
Integral Time Step	Time step of the Integral	
Integral Decay	A value in units of pressure-time subtracted from the Integral when the integral is positive	
Low Overboost Level	A lower overboost limit in units of pressure time	
Lower Overboost Counter	A counter which is incremented when the Low Overboost Level is met or exceeded Low Overboost Counter limits must never be exceeded	
Low Overboost Counter Reset Condition	A time-based condition that will reset the Low Overboost Counter	
High Overboost Level	A maximum overboost limit in units of pressure-time that can never be met or exceeded	

* All parameters indicated with TB are defined via Technical Bulletin.

Session Classification	RPM Threshold	Throttle Threshold	Integral Time Step	Integral Decay	Filter Coefficient	Low Overboost Level	High Overboost Level	Low Overboost Counter Limit	Low Overboost Counter Reset Conditions
	[RPM]	[%]	[s]	[mb*s]		[mb*s]	[mb*s]		
Qualifying	2000	25	0.001	5	0.1718	30	100	1	Crossing Start/Finish Timing Loop, Crossing Pit-In Timing Loop, Crossing Pit-Out Timing Loop
All Other Sessions	2000	25	0.001	5	0.1718	30	100	5	Crossing Pit-In Timing Loop, Crossing Pit-Out Timing Loop

7.10.4. Calculation Method

a. Resultant Boost is integrated over time at each time step at a rate equal to Integral Time Step when:

i. [(Actual RPM) >= (RPM Threshold)] AND [(Actual Throttle) >= (Throttle Threshold)] AND [(Resultant Boost) > 0]
ii. The current Integral value is added to the initial Integral value

b. The Integral Decay is subtracted from the Integral when Resultant Boost < 0

i. This value is always positive
ii. (Integral) – (Integral Decay) >= 0

c. A Low Overboost Counter is incremented if:

i. (Integral) >= (Low Overboost Level)

d. It is a violation of the boost regulations if either:

i. The Low Overboost Counter Limit is exceeded
ii. (Integral) >= (High Overboost Level)

e. The Integral is reset to zero (0) if:

i. [(Actual RPM) <= (RPM Threshold)] OR [(Actual Throttle) <= (Throttle Threshold)]

f. The Integral value is held in memory as an initial condition for the next time step.

7.10.5. Low Overboost Counter Usage Limitation

a. Automated or driver-initiated control strategies used for competitive advantage that result in Low Overboost counters are not permitted.

i. Examples include push-to-pass and overtake buttons.

7.11. Drive System

7.11.1. General

a. Manufacturer seals must be respected

7.11.2. Fluids & Lubricants

a. <u>Unrestricted.</u>

7.11.3. Clutch

7.11.4. Gearbox

7.11.5. Gears

a. A gear set consists of the following ratios, and must always be used in its entirety:

i. 6 forward ratios
ii. 1 reverse ratio
iii. 1 final drive ratio
iv. 1 drop gear (if applicable)

b. <u>In addition to the FIA Homologated gear set, Manufacturers of new homologations accepted by IMSA may declare two (2) additional gear sets via the Technical Eligibility Form by 30 days prior to participation in the first Event:</u>

i. Daytona Gear Set
ii. Short/Street Circuit Gear Set

c. Declared Daytona Gear Set must be used for Daytona Events.
d. FIA Homologated Gear Set must be used for Sebring Events.
e. Either the FIA Homologated or Short/Street Circuit Gear Set must be used for remaining Events.
f. Gear Sets must be used in their entirety (i.e. mixing of ratios between sets is prohibited)

7.11.6. Gearbox Control Unit

7.11.7. Differential

7.11.8. Axles

7.11.9. Uprights

7.12. Cooling System

7.12.1. General

7.12.2. Fluids

a. Entrants are permitted to utilize the following approved cooling fluids:

i. Water
ii. Air
iii. Non-glycol based fluids

7.12.3. Inlet Blockers

a. Entrants are permitted to utilize the following approved methods for the sole purpose of blocking off portions of the cooling system inlet openings:

i. Opaque adhesive tape.
ii. Panels made from carbon fiber and/or aluminum with associated fastener hardware.

7.12.4. Water System

7.12.5. Oil Cooling System

7.13. Fuel System

7.13.1. General

a. Maximum Capacity

i. The maximum fuel capacity for all Car Models is defined via Balance of Performance Tables and associated Technical Bulletins.
ii. The maximum fuel capacity is the total volume of fuel contained in the Car.

7.13.2. Fuel Types

a. The approved fuel for the Class is IMSA E10, as supplied by VP Fuels.

i. IMSA may require a fuel sample for inspection via a gas chromatograph.

7.13.3. Fuel Cell

a. Entrants must use blocks or balls to achieve maximum fuel cell capacity:

i. Any device, system, or procedure designed to increase, even temporarily, the total fuel storage capacity beyond the maximum is prohibited.

b. Any configuration of the homologated design intended to decrease the minimum full refueling time below the minimum time listed in the class specific BoP table is prohibited.

7.13.4. Fuel Lines

7.13.5. Fuel Sample Port

a. Entrants must equip the Car with the approved self-sealing connector for extraction of fuel samples:

i. Approved Connector: Staubli P/N: CBI06.7251/IA/JKV.
ii. Must be located immediately before the injector nozzles.
iii. Installation must be approved by IMSA.

7.13.6. Refueling Receptacle

7.14. Brake System

7.14.1. General

7.14.2. Fluids & Lubricants

a. Unrestricted.

7.14.3. Bias Assembly

7.14.4. Master Cylinders

7.14.5. Brake Lines

7.14.6. Calipers

7.14.7. Rotors

7.14.8. Pads

a. **Friction material is unrestricted.**

b. Backing Plates must be ferrous.

7.14.9. Ducting

7.14.10. Brake Duct Inlet Blockers

a. **Entrants are permitted to utilize the following approved methods for the sole purpose of blocking off portions of the brake duct inlet openings:**

i. Opaque adhesive tape.

ii. Panels made from carbon fiber and/or aluminum with associated fastener hardware.

b. Must be fixed.

7.14.11. Anti-Lock Braking System

7.15. Steering System

7.15.1. General

7.15.2. Fluids & Lubricants

a. **Unrestricted.**

7.16. Suspension System

7.16.1. General

7.16.2. Geometry Elements

7.16.3. Springs

a. **Entrants are permitted to change primary spring rates:**

i. The As-delivered number of springs per wheel must be respected.

b. **Entrants are permitted to install thrust bearings between the spring and perch.**

i. Maximum of two (2) per spring.

7.16.4. Dampers

a. **Entrants are permitted to change the damper internal build:**

i. Inerter technology is prohibited.

7.16.5. Bump Rubbers and Packers

a. **Unrestricted.**

7.16.6. Anti-Roll Bar

7.16.7. Third Elements

7.17. Wheels & Tires

7.17.1. General

7.17.2. Wheels

7.17.3. Wheel Attachment

7.17.4. Tires

a. The approved tire supplier for this Class is Michelin.
b. Tires must be used in accordance with SSR Attachment 3.

7.18. Electronics

7.18.1. General

7.18.2. Data Logger

a. Entrants are permitted to install a data acquisition system where not included in the As-delivered Car.
b. IMSA reserves the right to download and/or view all logged data at any time.

7.18.3. Telemetry

a. Entrants are permitted to utilize one-way telemetry systems for data acquisition purposes.

7.18.4. Wiring Loom

7.18.5. Sensors

7.18.6. Radio

a. Entrants are permitted to install one (1) primary, and one (1) secondary, two-way voice communication radio with car-to-pit communication capability:

i. Radio(s) must comply with Series Sporting Regulations.
ii. Secondary radio must not transmit or receive signals while primary radio is functional.

7.18.7. Rear View Camera

a. Where not homologated, Entrants may install a rear-view camera system.

7.18.8. Auxiliary Power Sources

7.18.9. Rain Light

a. When in use, the Homologated Rain Light must be set to the following specifications:

i. 4 Hz
ii. 50% duty cycle

ARTICLE 8. SERIES REQUIRED ELECTRONICS

8.1. Series Scrutineering Data System

8.1.1. Cars must be equipped with the IMSA Scrutineering Data System at all Events.

a. The manual for the Scrutineering Data System for the Class is the Bosch Scrutineering Systems Manual (BSSM)

i. Entrant must use the most current version of the BSSM as posted to the IMSA Competitor site.

b. Scrutineering system components must be purchased from, or supplied by, the approved sources listed in the BSSM.

8.1.2. The system consists of a combination of the following as specified by IMSA:

Part Number	Item
F02U.V0U.207-01	Bosch C60 Data Logger
F02U.B00.435-01 F02U.V01.511-02	Bosch MM5.10 5-axis Inertial Measurement Unit
F02U.V0U.150-01 F02U.V0U.152-01	Bosch LT2 Sport Lambda Sensor Controller
F02U.V0U.203-01	GPS Unit
F02U.V0U.204-01	1 Bar Pressure Sensor
F02U.V0U.205-01	3.5 Bar Pressure Sensor
F02U.V0U.206-01	Temperature Sensor
F02U.V01.342-01	USB Stick
F02U.002.996-01	USB Data Storage Device Port
AS112-35SM	MSA Diagnostic/Communication Port
0258.988.001	LSU 4.9 Lambda Sensor
Entrant Supplied	Wiring Loom
RG.DV.PV0099	Leader Light System
ET-200-01/GT-100-01	Fuel Flow Sensor

a. The scrutineering system and all its components are standalone and intended for IMSA use.

8.1.3. All components of the Scrutineering System must remain powered and functional during on-track sessions, and pit stops.

8.1.4. Entrants must complete IMSA Scrutineering Sensor Declaration Form no later than 24 hours before load-in day of every Event.

8.1.5. Scrutineering system components and sensors must be installed per the IMSA approved Car Model's Scrutineering Homologation document.

a. IMU unit must be:

i. Aligned within 1 degree of centerline of Car.
ii. Aligned within 0.5 degrees of horizontal.

b. Fuel Flow Sensor must have a valid calibration for the entire duration of all IMSA Sanctioned Events.

i. Fuel Flow Sensor calibration expires at 150 hours of run time.
ii. Entrants are responsible for monitoring the calibration time remaining. A cumulative run time counter CAN channel is provided to the Entrant from the IMSA Scrutineering Logger.

c. All other antennas on Car must be installed at least 250 mm from IMSA GPS Receiver.

d. Wiring loom must be:

i. Consistent with IMSA approved Car Models Scrutineering Homologation document
ii. Provided by the Entrant.
iii. Independent of any other system.
iv. Removable.
v. Verified and serialized before Entrant participates in their first event of each season, per the Loom Certification outlined in the BSSM.
vi. Certifications are only valid for the season they are issued.
vii. Available for additional testing when requested by IMSA.

8.1.6. CAN channels must be configured per the applicable DBC file posted in the regulation section of competitors.imsa.com.

a. Entrants must provide CAN channels from the ECU, chassis logger, or equivalent device per the CAN specification detailed in the BSSM.

b. CAN communication to the IMSA Scrutineering Logger must be transmitted directly from the device of origin, and not repeated through a 3rd party device.

i. Example: Engine RPM must be transmitted directly from the ECU to the IMSA Scrutineering Logger, and not through the chassis logger.

c. Scrutineering sensors take precedence over CAN provided values from the ECU or chassis logger.

d. Scrutineering sensor outputs are provided to the Entrant over a Public CAN bus.

8.1.7. Series Scrutineering Data System inspection and data collection requirements are:

a. Entrants must present all series mandated data collection media to the IMSA Technical Inspection trailer within thirty (30) minutes of the completion of each session.

i. For instances of less than 60 minutes from the end of a Session and the start of the next Session, Entrant must return both Session's data collection media within thirty (30) minutes of the completion of the second Session.

b. Series Scrutineering Data Logger must be installed and tested prior to Technical Inspection.

i. Entrant may be required to install USB Stick during inspection process at the direction of series officials.

c. Any repair to the looms must be approved by Bosch Motorsport and re-certification through Bosch Motorsport may be required.

8.1.8. Scrutineering system primary component units must have an IMSA Scrutineering Seal.

a. Each device ordered through Bosch Motorsport NA using the order form found in the Scrutineering System Manual will be delivered with the seal in place.

8.2. Safety Light System

8.2.1. Cars must be equipped with the Delphi Yellow Light Kit to indicate active flag status.

a. The Kit contains the following components:

i. Yellow Indicator Light
ii. Mounting Bracket
iii. Antenna
iv. Wiring Loom and Instructions

8.2.2. The Safety Light system must be installed and functioning during on-track activity.

a. The Yellow Indicator Light must be prominently installed within the cockpit, in clear line of sight of the driver.
b. Antenna Installation: The supplied antenna must be mounted:

i. On the Car roof
ii. Away from other antennae
iii. Following the diagram below (a ground plane is not required):

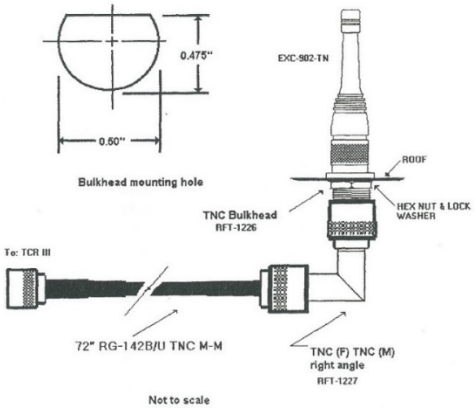

c. Wiring Loom Installation: The Wiring Loom has a flying lead input for +12 VDC and Ground to interface with additional wiring referenced in the installation instructions.

i. Entrants must supply additional wiring as required.

8.2.3. An activating receiver is available from IMSA during Safety Checks at each Event and remains the property of IMSA.

a. Entrants must surrender the receiver when required by IMSA.
b. A lost or damaged receiver is subject to a replacement fee referenced in the IMSA Accessories form.
c. Activating receiver must be installed using supplied Mounting Bracket

8.3. Driver ID System

8.3.1. Cars must be equipped with a Driver ID system to identify the active Driver piloting the Car.

8.3.2. Driver ID plugs must be installed and connected per the BSSM.

8.3.3. Transponder and plugs must ~~be tested and~~ operate to the satisfaction of the Timing and Scoring Officials.

8.4. X2 Transponder System

8.4.1. Cars must be equipped with the X2 Transponder System Kit (Qty 1) to transmit scrutineering data from the car.

a. X2 Transponder Kit contains the following component(s):

i. Transponder.
ii. Isolation Mounts.

b. Entrant must supply the following additional item(s):

i. X2 Transponder Mounting Bracket (available for purchase as listed in the IMSA Accessories Order Form).
ii. M4 Socket Head Cap Screw and Washer.

8.4.2. X2 transponder must be purchased via the IMSA Accessories Order Form.

8.4.3. Transponder system must be installed, as per IMSA approved Car Model's Scrutineering Homologation documentation, and functioning during Events.

a. Must be installed with appropriate thermal protection where the temperature cannot exceed 50 ºC

8.5. Leader Light System

8.5.1. Cars must be equipped with approved LED leader light panels.

a. IMSA Leader Lights are available from MoTec USA (https://www.milspecwiring.com/IMSA-WeatherTech-Leader-Light-Panel_p_2255.html)

8.5.2. Leader light system must be installed and functioning during the Event.

a. Leader lights must be installed and connected to the Scrutineering System Loom per the Car Model's Scrutineering Homologation document.

8.5.3. Cars must utilize MoTec USA CAN Isolation Module #PV0265

a. 1 CAN Isolation Module is required per panel
b. Purchase information here (https://www.milspecwiring.com/IMSA-WeatherTech-CAN-Isolation-Module_p_2941.html)
c. Ambient temperatures in installation location must not exceed 70 degrees C.
d. Firmware version 1.04 or newer is required.

8.6. Back-lit Panel

8.6.1. Cars must be equipped with white light-emitting side number panels for Races taking place partly by night.

a. Colored background must be cut out in the number shapes so they are illuminated during the night.
b. White light-emitting side number panels are supplied by Entrants.

8.7. Pro-Am Light (GTD)

8.7.1. GTD Cars must be equipped with a Pro-Am light per the IMSA approved Car Model's Scrutineering Homologation document.

8.8. In-Car Camera

8.8.1. Cars may be required to carry In-Car-Cameras (ICC).

a. Entrants must cooperate with the official broadcaster in the installation of the camera, including the provision of power for the equipment.

i. 2.5 A for camera power using with DTM06-2S-E007 connector:
- Pin 1: +12 VDC
- Pin 2: GND

ii. May require a battery pack.

b. Cars must mount an actual ICC, or the ICC replacement dummy unit, on their roof, and must:

i. Be mounted opposite side of centerline of the Car from the Driver
ii. 12.5" rearward of the trailing edge of the windshield
iii. 4.5" off the centerline of the roof
iv. Or as approved by IMSA

c. ICC replacement replica unit must be purchased from RPXpress (Phone: +1-828-428-0820
Email: lmcelwain@rpxpress.com)
d. Cars equipped with ICC must display the Car number in the ICC's home position field of vision.
e. ICC must not be removed or disabled by the Entrant for any Session.
f. If installed, ICC replacement dummy minimum weight is one (1) pound.

8.9. Tire Pressure Monitoring System

8.9.1. All Cars must utilize an appropriate motorsports specification Tire Pressure Monitoring System (TPMS).
a. All wheels must be equipped with TPMS sensors.
b. TPMS data communication must be configured to the Series Scrutineering Data System per Article 10.1.6.
c. TPMS must transmit pressure data when the Car is in motion.
d. Data must be accurate to the satisfaction of IMSA officials.

ARTICLE 9. REFUELING SYSTEM

9.1. Fuel Transfer

9.1.1. Fuel must be transferred from the autonomous supply tank to the Car using the equipment and methods defined in this Article.

a. Approved equipment as defined herein must be:

i. Unmodified.
ii. Installed and operational.

b. Approved method:

i. Gravity.

9.1.2. Fuel transferred to the autonomous supply tank must be delivered by means of a hose fitted with a self-sealing connector (e.g. dry break, cam-lock) connected to the autonomous supply tank.

9.2. Pit Tank

9.2.1. Construction of the Autonomous Supply Tank must:

a. Comply with FIA Appendix J Drawing n° 252-7 with the exception of the top plate shape and dimensions.
b. Any configuration of the IMSA-mandated design intended to decrease the minimum refueling time below the minimum time listed in the class specific BoP table is prohibited.
~~c. Have a simple cylindrical internal shape.~~
~~d. Not have any additional internal parts that could improve flow.~~
~~e. Have a tolerance on bottom flatness of less than 3 mm inside the tank.~~
~~f. Have the flow restrictor top face at the level of the internal surface of the bottom of the supply tank.~~
g. Have provisions to seal any mechanisms that regulate tank height.
h. Not have sensors other than as required by IMSA

9.2.2. Refueling tank height is measured from the top surface of the vessel to the track surface, not including vent, cover, cover plate, or fasteners, at a distance of 1.25 meters from the outermost face of the pit wall.

a. The required refueling tank height is 2.0 meters with a tolerance of +0/-1.0 cm.

9.2.3. Once inspected by an IMSA Official the Autonomous Supply Tank, Trolley, Peripheral Connections, and Restrictor must remain as inspected with all IMSA seals intact until the conclusion of the Race or upon an approved retirement via TIMS.

9.3. Peripheral Connections – GTD PRO

9.3.1. Tanks must be equipped with the IMSA-specified peripheral connections between the tank outlet and the refueling hose.

a. Parts below must be purchased from RPXpress (Phone: +1-828-428-0820 Email: lmcelwain@rpxpress.com) and used unmodified:

Part Number	Part	Description
ATL-TF 147	12-Bolt Gasket	
~~BSR-FR 1981~~	~~Bottom 80 deg. Elbow~~	~~Female Camlock x 2" Male~~
BSR.FR.1981.1	Bottom Elbow 67.12°	Female Camlock x Male 2" (Red)
BSR-FR R003	Deadman Valve	Stainless Deadman Valve
BSR.P.5K56.SS	Restrictor Housing	Deadman Outlet, 2" Male to 1 ½" Camlock

b. Details and purchasing of the of the Sentronics RigFlow Sensor can be found in Article 11.8

i. Sensor must be oriented such that the face plate is directed toward the hot pit lane.

c. FIA nut ring, as-supplied with original tank, must be used to secure the Sentronics Flow Sensor to the bottom of the supply tank using socket head cap screws.
d. A 0.125 inch hole must be drilled in two adjacent bolts connecting Sentronics Flow Sensor and FIA nut ring.
e. Refueling System Assembly Illustration:

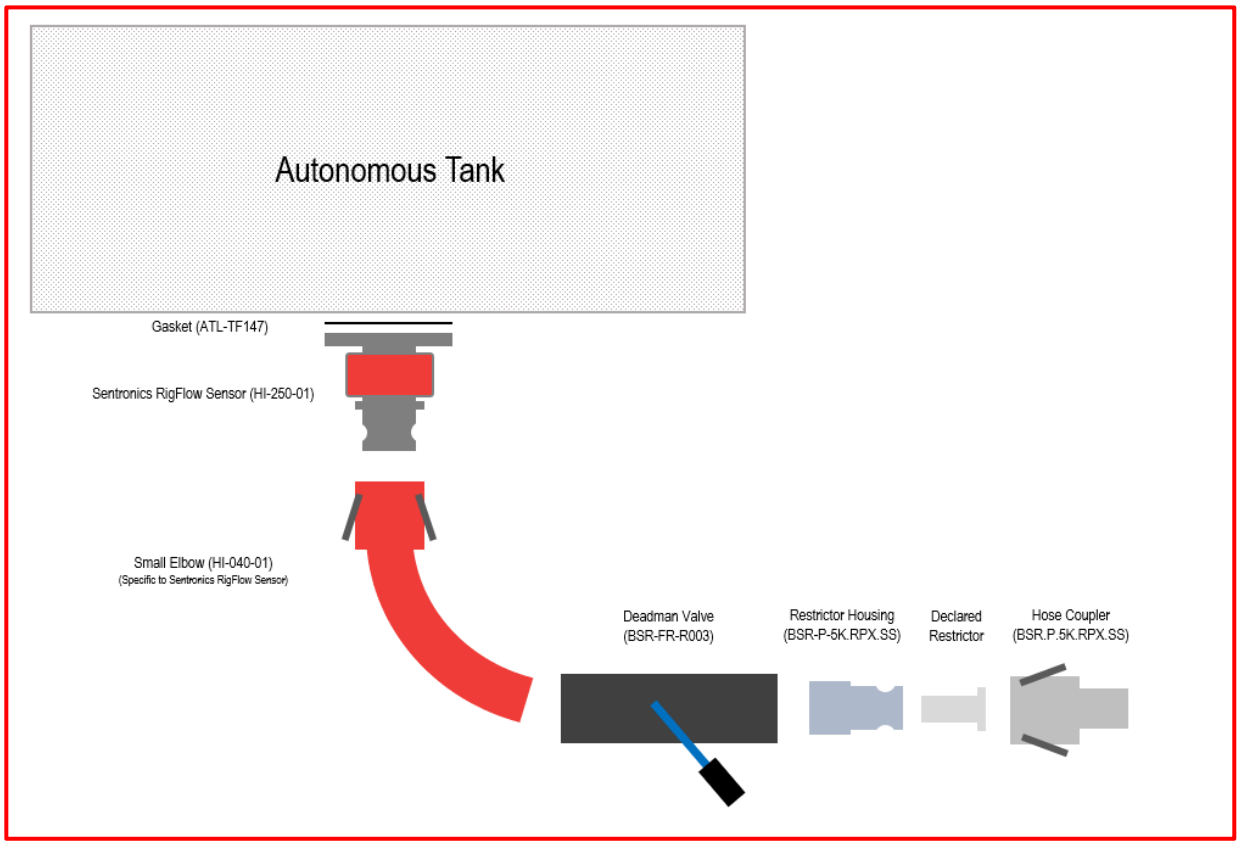

9.3.2. Deadman valve and bottom elbow assembly must be securely braced to remain attached to the tank in the event of an incident.

a. Mechanisms preventing normal operation of the deadman valve are prohibited.
b. Any configuration of the IMSA-mandated design intended to decrease the minimum refueling time below the minimum time listed in the class specific BoP table is prohibited.
c. During fuel delivery operations, the deadman valve must be fully open such that the throat of the ball is aligned axially with the outlet of the deadman valve body with the actuation handle fully extended.
    i. Adjustment mechanisms will be sealed by IMSA.

9.3.3. During refueling the air vent outlet must be connected using an appropriate coupling to the tank.

a. In dual point refueling, the dedicated vent hose maximum inside diameter must be less than 1.5 inches.

9.3.4. A sight glass is permitted to be installed to the outside of the supply tank and must be equipped with isolating valves mounted as close as possible to the tank.

9.4. Peripheral Connections - GTD

9.4.1. Tanks must be equipped with the IMSA-specified peripheral connections between the tank outlet and the refueling hose.

a. Parts must be purchased from RPXpress (Phone: +1-828-428-0820 Email: lmcelwain@rpxpress.com) and used unmodified:

Part Number	Part	Description
BSR-FR FN40	Outlet Flange	Bottom Tank 12-bolt housing
ATL-TF 147	12-Bolt Gasket	
BSR.FR.R.35GOLD	35.0mm Restrictor	Upper Restrictor (for positive seal to Elbow)
BSR-FR 1981	Bottom 80 deg. Elbow	Female Camlock x 2" Male
BSR-FR R003	Deadman Valve	Stainless Deadman Valve
BSR.P.5K56.SS	Restrictor Housing	Deadman Outlet, 2" Male to 1 ½" Camlock

b. FIA nut ring, as-supplied with original tank, must be used to secure the restrictor housing to the bottom of the supply tank.
c. A 0.125 inch hole must be drilled in two adjacent bolts connecting restrictor housing and FIA nut rin

9.4.2. Deadman valve and bottom 80 deg. elbow assembly must be securely braced to remain attached to the tank in the event of an incident.

a. Mechanisms preventing normal operation of the deadman valve are prohibited.
b. Any configuration of the IMSA-mandated design intended to decrease the minimum refueling time below the minimum time listed in the class specific BoP table is prohibited.
c. During fuel delivery operations, the deadman valve must be fully open such that the throat of the ball is aligned axially with the outlet of the deadman valve body with the actuation handle fully extended.
d. Refueling System Assembly Illustration:

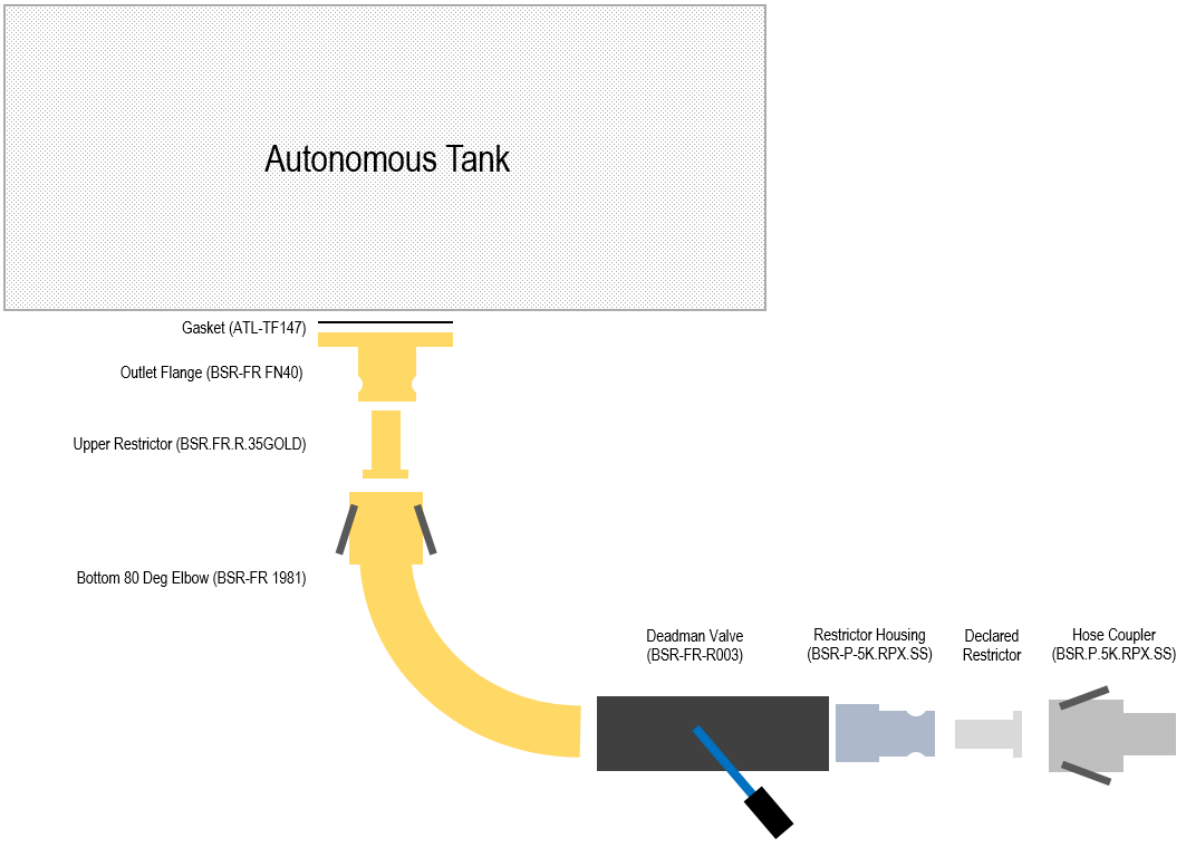

9.4.3. During refueling the air vent outlet must be connected using an appropriate coupling to the tank.

a. In dual point refueling, the dedicated vent hose maximum inside diameter must be less than 1.5 inches.

9.4.4. A sight glass is permitted to be installed to the outside of the supply tank, and must be equipped with isolating valves mounted as close as possible to the tank.

9.5. Refueling Hose

9.5.1. Refueling/vent hoses must have one end equipped with a self-sealing connector to fit the autonomous supply tank outlet.

9.5.2. Refueling/vent hoses are permitted to be protected for the sole purpose of resisting abrasion damage.

a. Cover must be easily removable by means of full-length Velcro or zipper.
b. Cover must be non-reflective

9.5.3. Hose maximum inside diameter:

a. Dual-port systems must be less than 1.5 inches for all hoses.
b. Single-port (coaxial) systems must be less than 1.5 inches for Refueling Hose and less than 75.0mm for Vent Hose.

9.5.4. Refueling hose minimum length must be greater than 3.0 meters.

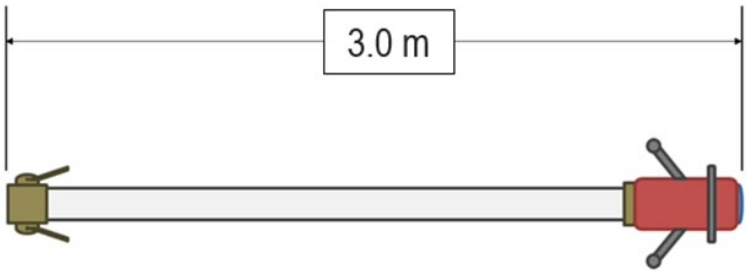

9.5.5. Minimum length is measured from the most distant plane of the dry break/fuel probe to the most distant plane of the fuel hose coupler.

9.5.6. Cars employing an approved offside refueling system, must have a vent hose with a minimum length of six (6) meters, connectors included.

9.6. Tank Support Stand

9.6.1. The tank must be attached to one of the following:

a. To a trolley meeting the following requirements:

i. All tower components must be assembled without any degree of freedom in relation to the trolley.
ii. Have a surface area greater than two (2) square meters.
iii. Utilize four (4) self-braking casters.
iv. Be ballasted with weight exceeding that of the tank when filled with fuel.

b. Scissor style (X-brace) stand

9.6.2. Trolley is permitted to have load sensors for the sole purpose of weighing fuel in the Autonomous Tank.

9.7. Boom

9.7.1. Entrants are permitted to attach a member (boom) to the trolley.

a. Boom must be independent of the tank and the tower.

i. Boom member must be permitted a degree of freedom in relation to the trolley (rotation following a vertical axis).

b. Boom is permitted to support:

i. Hose for a Car utilizing an approved offset vent or fuel filler.
ii. Lighting for the illumination of the pit stop.
iii. Download cable.

9.7.2. Boom must be identified with the Car number fixed to its outboard end, that must be:

a. Visible from either direction
b. A minimum of seven (7) inches high with a 1.25-inch stroke

9.7.3. Boom must respect the following dimensions:

a. Must not exceed four (4) meters in length
b. Must permit free passage of a height of two (2) meters over its entire length including hoses and/or accessories.

9.8. Refueling Restrictor

9.8.1. During refueling, all fuel entering the Car must pass through the refueling restrictor.

9.8.2. Refueling Restrictor must meet the following criteria:

a. Material must be an aluminum alloy.
b. Must comply with the IMSA Fuel Restrictor Part Drawing at the end of these Technical Regulations.
c. Restrictor size varies from 22.0 mm to ~~34.0~~ 35.0 mm by discrete increments 0.25 mm
d. Bore tolerance (+0.00 mm / -0.05 mm)

~~9.8.4. IMSA may adjust the refueling rig height and the minimum refueling time listed in the class specific BoP Tables and associated Technical Bulletins.~~

9.8.5. Refueling restrictors may be purchased from RPXpress (Phone: +1-828-428-0820 Email: lmcelwain@rpxpress.com).

a. At each Event, every Entrant must declare their chosen diameter, limited to 22 to ~~34~~ 35 mm in 0.25 mm increments, by completing the IMSA Refueling Restrictor Declaration Form no later than four (4) hours before the official start time of the Race.
b. IMSA utilizes the following scrutineering inspection methods to check minimum refueling times:

i. Calibrated autonomous ~~fuel supply~~ tank ~~level~~ sensor system
ii. Calibrated vehicle fuel flow sensors
iii. Minimum Refueling Time Audit (Reference: SSR ~~37.6~~ 37.10)

9.8.6. Refueling Restrictors are sealed by IMSA Technical Officials.

a. Entrants must receive written approval from IMSA to remove seals following inspection, and seals must be replaced by IMSA Technical Officials prior to on-track activity.

b. The following items must be drilled for safety-wire sealing of the restrictor

i. Two (2) adjacent Bolt heads of the Restrictor Housing
ii. Two (2) Hinge Bolts (threaded section) of the Outlet Pipe Cam Lock
iii. Two (2) Lock Lever Arms of the Refueling Hose Cam Lock
iv. A 0.125 inch hole must be drilled in the two female camlock levers on the bottom 80 deg. elbow assembly 0.5 inches below pin in the locations indicated in yellow on the diagram below:

9.9. Autonomous Tank Sensor System – GTD PRO

9.9.1. Autonomous fuel supply tanks must be equipped with ~~an IMSA Level Sensor Kit~~ Sentronics RigFlow pit tank fuel flow meter and wiring loom. Approved sensor and wiring harness as follows:

a. ~~Level~~ Flow sensor part number ~~EC-010-05 or EC-010-06 are~~ (HI-250-01).

b. Wiring harness part number (CMS2021-1487).

c. The ~~level~~ fuel flow sensor kit and wiring loom ~~are available for purchase from IMSA~~ must be purchased from an authorized Sentronics dealer ~~and are listed on the IMSA Accessories Order Form.~~

~~i. Level sensor kits include:~~
~~o Sensor Package~~
~~o Gasket~~
~~o Nut Plate~~
~~o All other hardware required to install the sensor in the tank~~
~~ii. Replacement parts are listed on the IMSA Accessories Order Form.~~
~~iii. Sensor package consists of the following sensors integrated into a single housing:~~
~~o Capacitive fluid level sensor~~
~~o Fuel temperature sensor~~
~~o Vent pressure sensor~~

iv. Sensors packages are serialized, and assigned to a Car and Pit Tank.

d. Sensors packages ~~are calibrated to the assigned Pit Tank~~ must remain exclusive to the assigned Car and Pit Tank throughout the Event in which the sensor is declared.

~~i. Calibrations require a drum of fuel, 2 crew members, and standard refueling safety equipment, as per Sporting Regulations 21.2.1~~
~~ii. Sensor package must remain exclusive to the assigned Car and Pit Tank.~~
~~iii. Sensor packages are sealed by IMSA Technical Officials.~~
~~iv. Entrants must receive written approval from IMSA to remove seals following calibration, and seals must be replaced by IMSA Technical Officials prior to on-track activity.~~
~~v. Recalibration of sensor and tank may be required before Race.~~
~~vi. Wiring loom connects the sensor package to a dedicated port on the IMSA pit-lane network box.~~
~~vii. Wiring loom must be IMSA certified and unmodified.~~

9.9.2. Wiring loom connects the sensor package to a dedicated port on the IMSA pit-lane network box.

a. Wiring loom must be IMSA certified and unmodified.

9.9.3. Entrant must ensure the ~~level~~ flow sensor system is functional.

a. Two hours before 1st Practice Entrant must connect the loom to a specific pit-lane network box designated by IMSA.
b. Loom must remain connected until the conclusion of the Event
c. Entrant must remove the loom at the conclusion of the Event.
d. Flow Sensor must be installed in the location and orientation as indicated in ~~the following diagrams~~ Article 11.3.

~~i. Drilling templates and other dimensioned drawings that will assist in the modification of the tanks to accommodate the sensor installation are also included.~~

9.9.4. Wiring loom connects the sensor package to a dedicated port on the IMSA pit-lane network box.

a. Wiring loom must be IMSA certified and unmodified
b. Wiring harness part number (CMS2021-1487) must be used to connect flow sensor to pit-lane network.

9.10. Level Sensor System - GTD

9.10.1. Autonomous fuel supply tanks must be equipped with an IMSA Level Sensor Kit and wiring loom.

a. Level sensor kit part numbers EC-010-05 or EC-010-06 are permitted
b. Level Sensor kits purchased as previously used must request recalibration by IMSA 7 days prior to load in for the Event.

9.10.2. The level sensor kit and wiring loom are available for purchase from IMSA and are listed on the IMSA Accessories Order Form.

a. Level sensor kits include:

i. Sensor Package
ii. Gasket
iii. Nut Plate
iv. All other hardware required to install the sensor in the tank

b. Replacement parts are listed on the IMSA Accessories Order Form.

9.10.3. Sensor package consists of the following sensors integrated into a single housing:

a. Capacitive fluid level sensor
b. Fuel temperature sensor
c. Vent pressure sensor

9.10.4. Sensors packages are serialized and assigned to a Car and Pit Tank.

a. Sensors packages are calibrated to the assigned Pit Tank.

i. Calibrations require a sealed drum of fuel, ~~2~~ 3 crew members, and standard refueling safety equipment, as per Sporting Regulations 21.2.1
ii. Sensor package must remain exclusive to the assigned Car and Pit Tank.

b. Sensor packages are sealed by IMSA Technical Officials.

i. Entrants must receive written approval from IMSA to remove seals following calibration, and seals must be replaced by IMSA Technical Officials prior to on-track activity.
ii. Recalibration of sensor and tank may be required before Race.

9.10.5. Wiring loom connects the sensor package to a dedicated port on the IMSA pit-lane network box.

a. Wiring loom must be IMSA certified and unmodified.

9.10.6. Entrant must ensure the level sensor system is functional.

a. Two hours before 1st Practice Entrant must connect the loom to a specific pit-lane network box designated by IMSA.
b. Loom must remain connected until the conclusion of the Event
c. Entrant must remove the loom at the conclusion of the Event.

9.10.7. Sensor packages must be installed in the location and orientation as indicated in the following diagrams.

a. Drilling templates and other dimensioned drawings that will assist in the modification of the tanks to accommodate the sensor installation are also included.

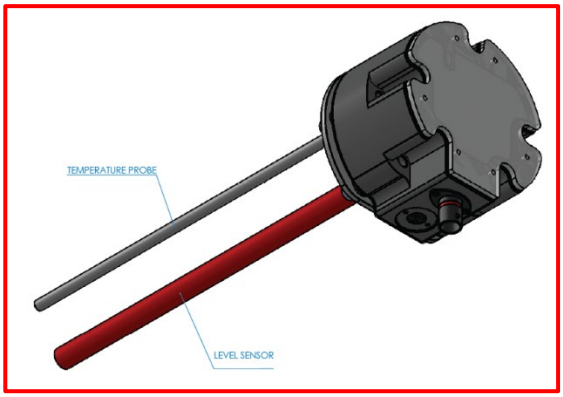
TEMPERATURE PROBE
LEVEL SENSOR

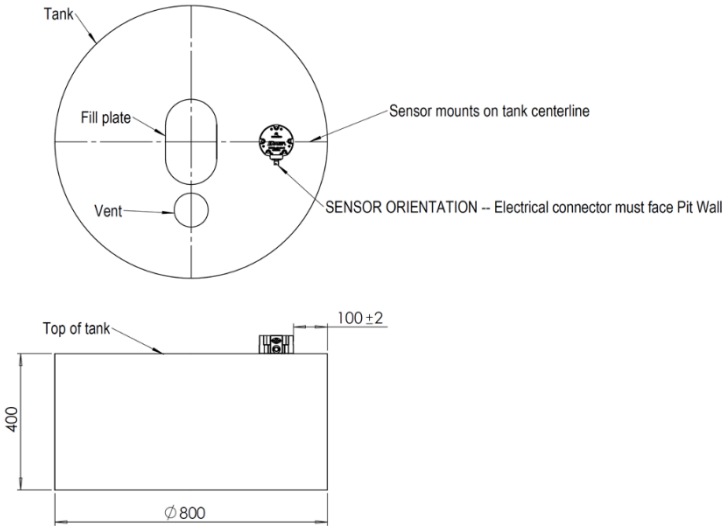
Tank
Fill plate
Vent
Sensor mounts on tank centerline
SENSOR ORIENTATION -- Electrical connector must face Pit Wall
Top of tank
100 ±2
400
∅ 800

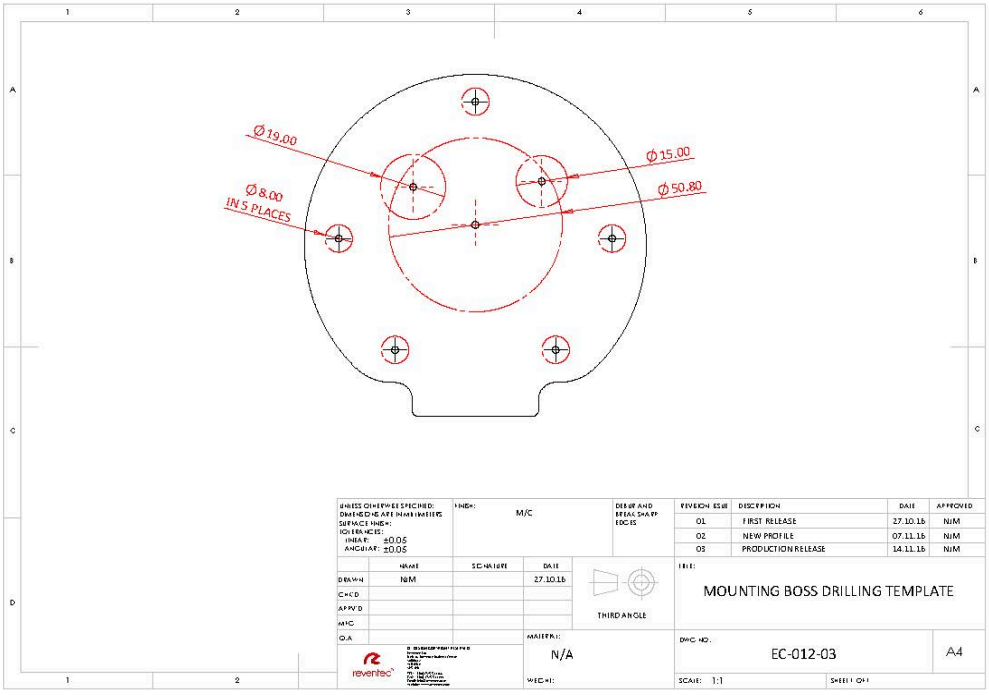
∅ 19.00
∅ 8.00
IN 5 PLACES
∅ 15.00
∅ 50.80
UNLESS OTHERWISE SPECIFIED:
DIMENSIONS ARE IN MILLIMETERS
SURFACE FINISH:
TOLERANCES:
LINEAR: ±0.05
ANGULAR: ±0.05
FINISH: M/C
DEBUR AND BREAK SHARP EDGES
REVISION ISSUE
DESCRIPTION
DATE
APPROVED
01 FIRST RELEASE 27.10.16 NIM
02 NEW PROFILE 07.11.16 NIM
03 PRODUCTION RELEASE 14.11.16 NIM
NAME
SIGNATURE
DATE
DRAWN NIM 27.10.16
CHKD
APPV'D
MFG
Q.A
THIRD ANGLE
TITLE:
MOUNTING BOSS DRILLING TEMPLATE
MATERIAL: N/A
WEIGHT:
DWG NO. EC-012-03
A4
SCALE: 1:1
SHEET 1 OF 1
revenitec

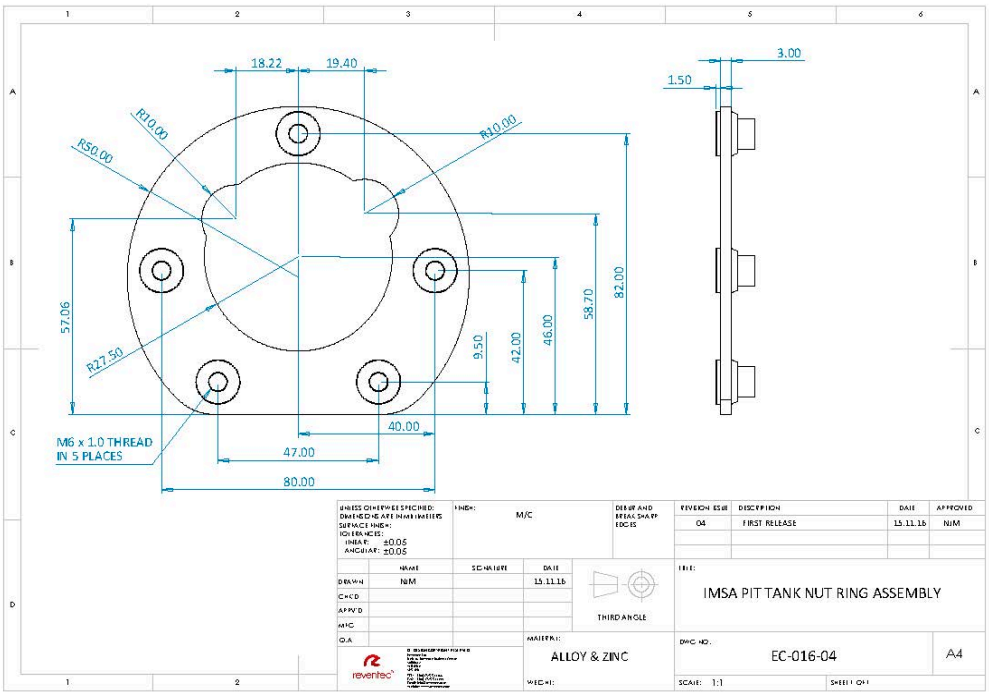
18.22
19.40
R10.00
R10.00
R50.00
3.00
1.50
57.06
R27.50
9.50
42.00
46.00
58.70
82.00
40.00
47.00
80.00
M6 x 1.0 THREAD
IN 5 PLACES
M/C
04
FIRST RELEASE
15.11.16
NiM
IMSA PIT TANK NUT RING ASSEMBLY
THIRD ANGLE
ALLOY & ZINC
EC-016-04
A4
SCALE: 1:1

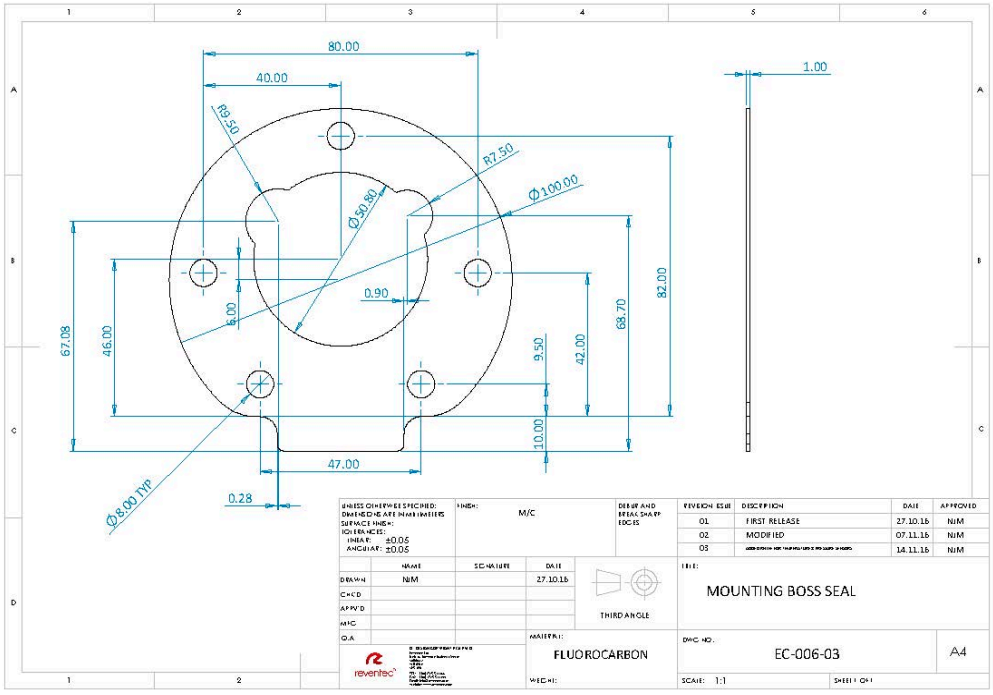
80.00
40.00
1.00
R9.50
R7.50
Ø50.80
Ø100.00
0.90
6.00
67.08
46.00
9.50
42.00
68.70
82.00
10.00
47.00
Ø8.00 TYP
0.28
M/C
01
FIRST RELEASE
27.10.16
NiM
02
MODIFIED
07.11.16
NiM
03
14.11.16
NiM
MOUNTING BOSS SEAL
THIRD ANGLE
FLUOROCARBON
EC-006-03
A4
SCALE: 1:1

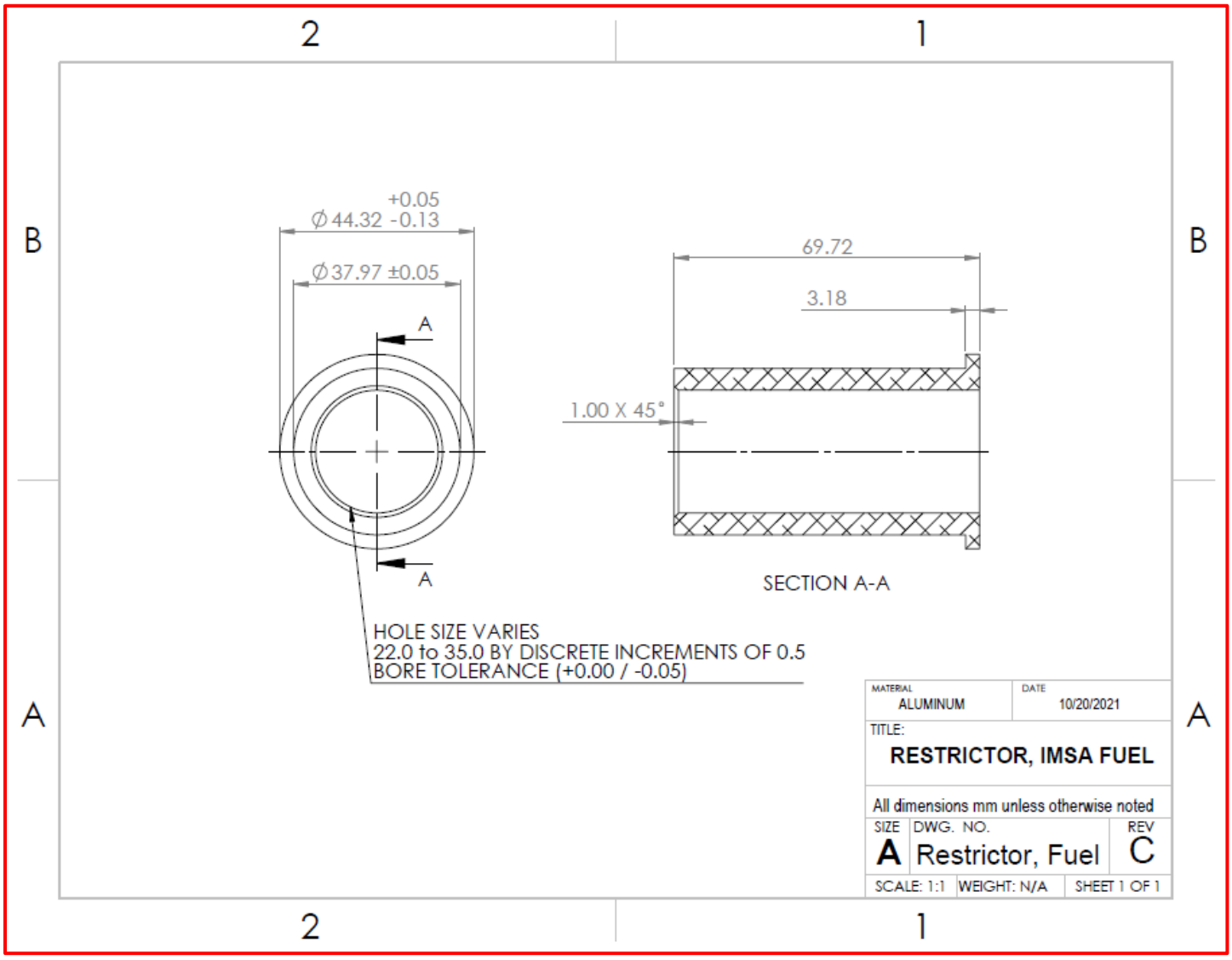
+0.05
Ø44.32 -0.13
Ø37.97 ±0.05
A
A
69.72
3.18
1.00 X 45°
SECTION A-A
HOLE SIZE VARIES
22.0 to 35.0 BY DISCRETE INCREMENTS OF 0.5
BORE TOLERANCE (+0.00 / -0.05)
MATERIAL
ALUMINUM
DATE
10/20/2021
TITLE:
RESTRICTOR, IMSA FUEL
All dimensions mm unless otherwise noted
SIZE
A
DWG. NO.
Restrictor, Fuel
REV
C
SCALE: 1:1
WEIGHT: N/A
SHEET 1 OF 1