2023 TECHNICAL REGULATIONS

Revision Date March 13, 2023

Series:

PORSCHE DELUXE CARRERA CUP NORTH AMERICA

PRO PRO-AM AM

Sanctioned by:

INTERNATIONAL MOTOR SPORTS ASSOCIATION

One Daytona Blvd.

Contents: Technical Regulations

Foreword:

For all Members, the IMSA RULES of the International Motor Sports Association establish the foundation forthe organization and conduct of all IMSA Sanctioned Events. The IMSA RULES take effect immediately upon publication.

The purpose of the RULES is to: (i) promote safety, the sport of automobile Competition and IMSA, (ii) enhance Competition, (iii) ensure the quality, fairness and integrity of the IMSA programs and operations and (iv) achieve prompt finality in the Competition results ("Purpose").

ALL MEMBERS ARE REQUIRED TO REVIEW THESE IMSA RULES CAREFULLY.

The IMSA RULES consist of following three (3) sections and the Event Supplementary Regulations (SR):

- The Technical Regulations, which outline the rules and regulations for the specific Cars and equipment. The Technical Regulations may be modified or changed at any time by the publication ofa Technical Bulletin, amending the Technical Regulations.

- The IMSA Sporting Regulations (ISR), which concern Entrant and Event procedures, as well as guidelines for the safe and uniform operation of the sport. The ISR may be modified or changed atany time by the publication of a Competition Bulletin, amending the ISR.

- The Series Supplementary Regulations (SSR) that provides Series-specific information about each IMSA Series. The SSR is integrated into the ISR and are designated with "(SSR)" next to the Paragraph title. The SSR may be modified or changed at any time by the publication of a Competition Bulletin, amending the SSR.

Any portion of the RULES may be modified though Bulletins (Competition Bulletins and Technical Bulletins, respectively) and takes force when published. Once published, the Bulletin shall take precedence over the applicable portion of the RULES. Additionally, the RULES may be modified for an Event by the Race Director through the mandatory briefing instructions.

HOW TO READ THE RULES

These Technical Regulations grant specific permissions for modification, change, or adjustment of the Specification of the Car. Unless specifically defined as permitted, any modification, change, or adjustment is inherently prohibited. This philosophy and specific modifications are more clearly defined in Sections 1 & 2

The Technical Regulations are specific to categories, classes, and types of race cars in a Series. Where the Technical Regulations conflict with the ISR or the SSR, the Technical Regulations shall govern.

The SR is specific to an Event and published in conjunction with the Event schedule. Where SR conflicts with the ISR, SSR, and/or Technical Regulations, the SR shall govern.

MASTHEAD OF OFFICIALS

John Bishop* / Bill France, Sr.*	Founders – IMSA
Dr. Don Panoz*	Legacy Vice Chairman
Jim France	Chairman
Lesa Kennedy	Director
Ed Bennett	Chief Executive Officer
John Doonan	President
Tracey Lesetar-Smith	Director and Legal Counsel
David Pettit, Vice President	Senior Vice President, Marketing
Simon Hodgson, Vice President	Vice President, Competition
Brandon Huddleston	Vice President, Partnership Marketing and Business Development

*Deceased

Technical Definitions

A. **Car** means a singular representation of a Car Model possessing a Technical Credential, entered byan Entrant in an Event.

B. **Car Model** means a specific model of a vehicle constructed by an IMSA-recognized Manufacturer Partner and intended for Competition.

C. **Class** means a category for Cars sharing a common set of Homologation Regulations and differentiated from others by type of Car Model.

D. **Competition** means a contest of competitive nature in which a Car takes part during an Event and results of which Competition are published.

E. **Constructor** means an entity that designs and builds Race car chassis.

F. **Entrant** means an entity or person who has entered a Car that has been accepted for Competition and holds an IMSA Membership in the capacity of an Entrant or Entrant/Driver.

G. **Event** means an IMSA Sanctioned motorsport activity. It includes the designated Race as well as all periods for registration, inspections, practice Sessions, Qualifying Sessions, racing, pre- and post-Race activities and inspections, and rain or postponed dates related thereto.

H. **Homologate** means to execute the Homologation Process.

I. **Homologated** means a Car Model approved through the Homologation Process.

J. **Homologation** means the concept of all things associated with Homologation Authority approval viathe Homologation Process.

K. **Homologation Authority** means an entity with the authority to Homologate**.**

L. **Homologation Documentation** means all files, documents, information, and communication associated with the issuance of official approval of Homologation.

M. **Homologation Identifier** means the unique identifier (generally including a string of characters identifying the Category or Class of Homologation followed by a sequential number assigned to the Car Model) serving as a reference to the official approval of Homologation, assigned by the Homologation Authority.

N. **Homologation Process** means all procedures associated with petitioning a Homologation Authorityfor approval that a Car Model complies with the Homologation Regulations.

O. **Homologation Regulations** means a set of technical requirements and criteria used to design, construct, and document a Car Model intended for racing in a specific category or class of racing.

P. **Manufacturer** means a Manufacturer Partner constructing an approved Car Model.

Q. **Manufacturer Partner** means a recognized IMSA Official Automotive Partner.

R. **Permissive** means modifications explicitly authorized by these Technical Regulations are permitted and modifications not explicitly authorized by these Technical Regulations are prohibited.

S. **PMNA** means Porsche Motorsport North America**.** Referred to extensively throughout this document.

T. **Specification** means all technical characteristics of the Car Model defined by the Homologation and Technical Credential.

Technical Regulations

1. Technical Series Regulations

1.1 Summary of the eligible groups/classes

The IMSA Porsche Carrera Cup North America is a one-make Series with three group/class classifications.Pro, Pro-Am, and Pro-Am 991.

Only Cars of the type/model Porsche 911 GT3 Cup, type 992 (a special series produced by Porsche AG),of the model year 2021 fully comply with these Regulations are eligible to participate in Pro and/or Pro-Am.

The Cars must meet the technical specifications of these Regulations and Appendix J of the International Sporting Code in full.

Cars submitted by “Porsche AG” may deviate from the Technical Regulations for development purposes. The deviations shall be referred for approval to IMSA before the Car is used and shall not involve any safety-critical modifications.

1.2 Principles of the Technical Regulations

In accordance with:

☒ Art. 251 and 277 (Group EII-SH) of Appendix J (FIA ISC)
☒ These Technical Regulations
☒ The most current published documents from Porsche Racecar Service Information (PMRSI)
☒ Technical Manuals of the eligible Cars from PMNA
☒ Technical Information from PMNA
☒ Software Information of PMNA
☒ Parts Catalogues of the eligible Cars from PMNA

Should there be any discrepancy between the provisions of these Technical Regulations and any relevant Technical Manual, Technical Information, Software Information or Parts Catalogue, this document will take precedence.

Any requirements specified in a Technical Manual, Technical Information, Software Information and/or Parts Catalogue may be updated by Porsche Motorsport North America. For software information, only the latest version is valid but setups (based on the latest version) may be varied within the parameters allowedby Porsche Motorsport North America. Any requirements may be varied for any specific competition by means of a Bulletin issued by IMSA at that Event.

1.3 General/preamble

Everything that is not expressly permitted in these Regulations is prohibited. Permitted modifications must not result in any illegal modifications or infringements of the Regulations. Any addition or removal of material, heat treatment or coating to alter the properties of a part or component and/or its dimensions is forbidden. Mounting a part in a different way or location than the original delivery condition is forbidden. Any permitted changes may only serve the intended purpose. The decision of the IMSA shall be final regarding any interpretation of these Regulations. IMSA reserves the right to amend and extend these regulations (in consultation with the DMSB).

1.4 Driver Equipment: See Sporting Regulations

1.4.1 Drinking system

- A drinking system may be used.
- Electric pumps are permitted as long as they require less than 5 amps and use the as delivered electrical connections
- Installation needs to be fixed using metal hardware and be able withstand a crash of 30G.
- Subject to approval by IMSA.

1.4.2 Driver Cooling system

- A cooling system with cooling vest and or helmet air may be used. The installation according to the manufacturer's instructions is the sole responsibility of the Entrant.
- Installations must meet the following conditions.
  A. Driver cooling systems must use non-flammable refrigerant (e.g. R134a, water)
  B. The system must be mounted in the passenger seat area adjacent to the authorized ballast location. See Attachment 1
  C. The mounting may serve no purpose other than retaining the cooling system in the Event of a collision
  D. All Driver cooling system components must be securely mounted using metal hardware and be ableto withstand an impact of 30 G.
  E. The use of open hook type strap and loop fasteners (Velcro) is prohibited.

1.5 General Regulations

1.5.1 Permitted modifications and installations

The only work which is permitted to be carried out on the Cars is that necessary for its normal servicing, orfor the replacement of parts worn through use or accident.

The limits of the modifications and installations permitted are specified hereinafter. Any part worn through use or accident may only be replaced by identical Porsche Genuine Parts that are assigned to the eligible Cars in compliance with Item 2.1. The Porsche Genuine Parts are specified in the valid spare parts cataloguein each case.

The use of components manufactured by Porsche AG for other groups of Cars (e.g. Porsche road cars) is also prohibited.

The use of any items described as "optional" in the parts catalogue is prohibited if their use is not specifically permitted by these Technical Regulations.

Throughout the Car, the standard fastening components such as nuts, bolts, washers, lock washers,spring washers and splint pins must only be replaced by Porsche Genuine Parts.

The service and replacement intervals and adjustment values specified by Porsche AG (see Technical Manual) are to be observed.

IMSA may permit modifications that do not correspond to the series production status on all or individual Cars, providing these do not permit a competitive advantage (e.g. for the attachment of cameras; radio installations, etc.). The Entrant must make written application to IMSA and receive written authorization before making any such modification

1.6 Minimum weights and ballast

It is the Entrant's responsibility to ensure at all times during a competition the mandatory minimum combined weight of the Car with empty fuel tank, Driver equalization weight and the Driver (together with all Driver equipment) is reached. At no time during a competition is the Car weight permitted to be less than the mandatory minimum weight when the Car is either presented for technical scrutineering, is on the track or inParc Fermé.

The minimum weight must also be observed when the levels of operating liquids are under minimum level. The

official scale is located in the IMSA technical scrutineering area or in an alternative designated place.

1.6.1 Ballast

The installation of original Porsche ballast weights is permitted on the auxiliary weight base plate at the position of the passenger's seat in accordance with the illustration in Attachment 3. The ballast weights are identified by spare part numbers in the spare parts catalogue and the reference table in Attachment 1. No other ballast weights or locations are permitted.

A. Addition or removal of ballast during the Race or Qualifying is prohibited.
B. No weight may be removed from the OE structure of the Car and be placed in the ballast box.
C. IMSA may, at its sole discretion, determine any additional weight that must be carried on a Car for any phase of the Event.

1.6.3 Minimum vehicle weight

The minimum weight of the Car shall be communicated via IMSA Technical Bulletin prior to the first Eventof the Season.

The minimum weight of a vehicle consists of:

A. The combined weight of the Car with empty fuel tank;
B. The weight of the onboard camera (surveillance camera and/or official TV camera)
C. The radio system
D. The Driver comfort system or the weight of the respective substitute ballast.
E. The installed additional weights (excluding driver equalization weight)
F. The weight of any additional parts or systems required by IMSA or Porsche to be fitted for development purposes

1.6.4 Official Driver weight

The official minimum weight of a Driver will be set at the first Event, or when requested by IMSA, when the Driver weighs in on the official scale under the direction of IMSA officials.

A. During the weighing, each Driver must wear his complete Driver apparel as set out in Sporting Regulations, plus the mandatory head restraint system.
B. Once IMSA has recorded a Driver's weight, this weight becomes the "Official Driver Weight".
C. This "Official Driver Weight" will be rounded up to the next whole pound.
    1. For example; if a Driver and required equipment weigh 203.49 pounds, the recorded weightwill be 204 pounds.
D. The Official Driver Weight is used in Scrutineering for this and all subsequent Events or until a Driveris re-weighed.
E. A Driver may request to be reweighed at the beginning of an Event and a new Official Driver Weightwill be recorded and effective beginning at that Event.

F. When applicable the conversion factor of .453592 kg per 1 pound will be used.
G. IMSA may require a Driver to be reweighed at any time.

It is the responsibility of the Entrant to ensure that the sum of the installed equalization weight plus his actual weight (including his personal equipment) achieves or exceeds the minimum weight at all times.

1.6.5 The total weight of the Driver and Car
The total combined weight for the Car and official Driver weight shall be announced via Bulletin prior to the first Event. IMSA may in their absolute discretion decide to weigh the Car and Driver separately, in combination or with substitution weight for the Driver.

A. If the Car is weighed without the Driver IMSA will add weight bags (using the official Driver weight)to the Driver seat.
B. Prior to weighing a Car and after taking a fuel sample, the Team shall remove the remaining fuel fromthe fuel tank under the direction of IMSA.
C. When applicable the conversion factor of .453592 kg per 1 pound will be used.

1.6.6 Weight changes during Qualifying and Races
During any Qualifying session and Race, the weight of the Car is only permitted to be altered by:

• Changing from slick tires to wet tires or vice versa;
• Consumption of consumable materials and fluids.

On the way from the circuit to the impound and in the impound area itself, and on the way to the post-Race technical scrutineering under no circumstances is weight permitted to be added to the Car or the Driver.

1.6.7 Verification of the minimum weights by the participants on the official scale
Entrants have the opportunity to check the weight of their Cars and Drivers during the Event on the official scale with the permission of IMSA. Only the measurements recorded by IMSA shall be deemed accurate forthe purposes of compliance with the regulations.

1.6.8 Personal protective Driver equipment during weighing
During the weighing, each Driver must wear his complete Driver apparel as set out in the SportingRegulations, plus the mandatory head restraint system.

1.6 9 Weighing of Cars
The Cars are weighed as follows:

- Weighing of Cars is carried out regularly on the official scale under the direction and supervision of IMSA Officials.

1.6.10 Leaving the weighing area
Without the consent of IMSA, the Driver is not permitted to leave the weighing area and the Car is not permitted to be removed.

1.6.11 Replacement and loss of Car parts

All Car parts that were replaced during the practice, Qualifying session and Race must be presented to IMSA without request for inspection. The parts that were removed from the Car will be marked by IMSA if necessaryand are not permitted to be modified in any way afterwards. These parts must remain in the pit or in the technical scrutineering tent in sight of IMSA or their assistants until released by IMSA. These parts can be considered when determining the weight instead of the replacement parts.

In case of a loss of coolant, the final weight of the Car may be only determined by draining all remaining coolant liquid (from engine, coolant reservoir, all radiators, all coolant hoses and connectors) and adding 24 kg to the measured weight of the Car.

1.6.12 Regulations on the route to and in the weighing area

Impound rules apply to the route to the weighing area and in the weighing area itself. In addition to IMSA, only the responsible officials are permitted to enter the weighing area. In this area, the only activities on the Car are those expressly permitted by the aforementioned persons. If a Car is not presented for weighing despite a request, IMSA will inform the Race Director and shall be deemed a violation of the RULES.

1.7 Car damage

Should a Car be presented for weighing with lost or damaged parts it shall be at the sole discretion of IMSA to determine the parts that should be replaced prior to the Car being weighed.

1.8 Emissions Regulations

Cars must be equipped with the catalytic converter system as supplied by Porsche Motorsport North America.

1.9 Noise Regulations

The maximum permitted noise limits are 144 dB (A) measured in compliance with the L_{WA}- procedure and 112 dB (A) in compliance with L_P-procedure.

1.10 Advertising and partnerships: See Sporting Regulation Attachment 5

1.11 Safety equipment

The Cars must possess the following safety equipment.
The article numbers refer to the current Appendix J of the ISC unless stated otherwise.Art.

277 (Group EII-SH)

1.11.1 Driver Safety Harness System

- It is required to use the Safety Harness as delivered with the Car and from Porsche and installed per the technical manual.
- Harnesses must be replaced at the request of IMSA, or whenever the following conditions occur:
  A. Expiration:
     1. FIA Homologated: Immediately following December 31st of the year printed on the label.
  B. Damage:

1. Following a severe collision.
2. Webbing is cut or frayed or weakened due to actions of chemicals or sunlight.
3. Buckles are bent, deformed, rusted, or improperly functioning.

- Entrants are responsible for ensuring the Driver safety harnesses and all associated components are properly labeled, installed, used, and maintained.

1.11.2 Driver Containment Nets

- Cars must be equipped with driver containment nets as delivered from Porsche and per the mounting instructions in the Technical Manual.

1.11.3 Protective Padding

- Cars must be equipped with Porsche padding and installed per the Technical Manual

1.11.5 Master Electrical Switches

- Cars must be equipped with interior and exterior master electrical switches as homologated and installed as OE.
- Interior and exterior master switches must be clearly identified by a self-reflective symbol of a red spark surrounded by a white-edged, blue triangle with a base greater than 30 mm.

1.11.6 Fire Suppression System

Cars must utilize the original Porsche Fire System as delivered in the Car and described in PorscheManual documentation. The on-board fire suppression system must be switched into position “Armed” and the red LED illuminated during travel to the pit lane for each Session and must not be switched off until the car is returned to the team area or Parc Fermé.

1.11.7.0 Towing Eyes

- Front and Rear towing eyes as supplied with the Car must be properly mounted and marked per IMSA Rules.

1.12 Fuel type and single fuel

1.12.1 The following single fuel must be used

- The approved fuel for the Class is IMSA E10, as supplied by VP Fuels.

  A. IMSA may require a fuel sample for inspection via a gas chromatograph.

1.12.2 Fuel controls

IMSA shall be entitled to take fuel from a participant’s Car at any time during the Event. At any time of the Event until the end of the protest deadline (subject to removal of fuel for the weighing procedure). These samples must be identical to the reference fuel taken from the supplier designated above. If IMSA requests that a Car be defueled (for example to check the minimum weight of the Car without residual fuel), a fuel sample may be taken prior to defueling the Car.

- Approved Connector: Staubli P/N: CBI06.7251/IA/JKV.
- Installation must be approved by IMSA.

1.12.3 Refueling, refueling installations and control

All additives are prohibited. Fueling and refueling of the Cars during practice, Qualifying and the Race is forbidden. All chemical changes to the fuel are forbidden. Artificial cooling of fuel is prohibited

Any fuel operations not utilizing a closed-circuit refueling system (eg: bowser) must be performed outside the team tent. All personnel working in this area must wear full fireproof clothing (including shoes, gloves, googles, balaclavas, etc.). At least two 9kg ABC Dry Powder or alternatively two 5kg CO2 fire extinguishers with stand-by personnel (not involved in any fuel operations) must be present in this area. Under no circumstances must members of the public, team guests or unauthorized personnel be permitted in this area at any time during the fueling operation; it is the responsibility of the team (Entrant) to ensure that suchpersons are excluded from the area. Hose(s) used for fuel removal from the Car during impound must have a 10 cm long (minimum) clear section.

Any work requiring the fuel cell to be opened may only be performed after all fuel has been completely removed from inside the fuel cell and with appropriate protection and fire extinguishers being present at the respective work place.

Smoking is prohibited when any operation involving fuel, or the fuel cell is in progress.

2. Specific Technical Regulations

2.1 General information

Technically identical Cars with the designation Porsche 911 GT3 Cup (992), built by Porsche AG in a small production run based on the Porsche 911 GT3, shall be used for the Series. Only Cars built on or after model year 2021 are permitted.

General Car description

Porsche 911 GT3 Cup (type 992), From MY2021

Concept: Single-seated, near-standard Race Car based on the Porsche 911 GT3.
For further general descriptions, the entrant shall refer to the respective paragraph of these technical regulations.

Important Information

Certain special parts used in the Porsche 911 GT3 Cup cannot be obtained via the Porsche dealer organization but instead can only be obtained from the

Porsche Motorsport North America19800
South Main Street
Carson CA 90745
USA
Tel: +1-770-290-7059
Fax: +1-770-290-1291
Email: PMNARaceparts@Porschemotorsport.com

The Cars must comply with the requirements of these Technical Regulations. Technical inspection and acceptance of the Cars is undertaken by IMSA.
In addition to the Technical Regulations forming Part 2 in the Series Regulations, the following specificTechnical Regulations are applicable.

2.2 Engine

2.2.1 General description

Aluminum six-cylinder rear-mounted boxer enginePAG or
PMNA Sealed
Water-cooled six-cylinder boxer engine
Displacement 3,996 cm ³; stroke 81.5 mm; bore 102 mmMax. rpm: 8,750 rpm
Single throttle butterfly system
Intake manifold with two resonance flaps
Dry-sump lubrication with oil-water heat exchanger
Race exhaust system with DMSB certified catalytic converter
Engine control unit Bosch MS 6.6
Single-mass flywheel

The engines are sealed at Porsche AG or PMNA prior to delivery. A Car with an unsealed engine or with a damaged seal is not permitted to participate in the Series under any circumstances.

Any work on the engine that requires the seal to be opened is only permitted to be undertaken at PMNA or PAG. An engine change must be approved in writing by IMSA prior to the change.

Engines can be called in and inspected at the instructions of the Technical Scrutineering team. Before

the engines are delivered and refitted, a new seal shall be affixed at PMNA or Porsche AG.Mobil 1 ESP

X3 0W-40 engine oil is compulsory. All additives are prohibited.

2.2.2 Engine electronic control units

Throughout the entire Event, only the electronic control units coded and sealed by IMSA are permitted to be used.

The electronic control unit incl. the complete wiring harness must be used without modification(s). IMSA reserves the right to check or exchange the electronic control unit or record the engine characteristic data atany time during the Event. IMSA reserves the right to reprogram the electronic control units and to seal the plug-in connectors for reading the electronic control units at any time of an Event. It is thus ensured that the status of the program and data is identical for all participating Cars.

The Technical Scrutineers must be informed in writing of VIN and ECU number if an electronic control unit has the capability of traction control and is used in an event. Traction control has to be disabled at all times throughout the event.

2.2.3 Exhaust system

Contrary to the general Car description (see Item 2.1), the exhaust system, starting from the manifold, willbe modified completely with the parts listed in the valid parts catalogue for the respective Car and model year to the version “exhaust system without silencer” (general linguistic usage as “Supercup exhaust system”).

2.3 Power transmission (gearbox/differential lock)

2.3.1General description

Porsche six-speed sequential dog-type gearboxSealed at
PAG or PMNA
Gear ratios:

Ring & pinion gear	15/23	i = 1.533
Final drive	16/39	i = 2.438
1st gear	13/41	i = 3.154
2nd gear	17/40	i = 2.353
3rd gear	20/37	i = 1.850
4th gear	24/36	i = 1.500
5th gear	24/30	i = 1.250
6th gear	28/30-	I = 1.071

Internal pressure-oil lubrication with active oil cooling by oil-water heat exchangerMechanical
limited slip differential
Triple-disc sintered metal Race clutch Pneumatic
gear shift activation (paddle shift)

The gearboxes are sealed at Porsche AG or PMNA prior to delivery. A Car with an unsealed gearbox or with a damaged seal is not permitted to participate in the Series under any circumstances.

Mobilube 1 SHC 75W-90 transmission oil is compulsory. All additives are prohibited. No less than the minimum quantity of transmission oil in the gearbox as specified in the manual must be used at all times during the Event.

2.3.2 Ramp breakover angle

The ramp breakover angle of the differential lock is 52° (traction) and 35° (overrun). The ramp angles are determined from the axis of rotation (Attachment 4). The number of friction plates and the assembly order shall correspond to the specification in the manual and must not be changed. The fitted friction plates must comply in terms of part number, allocation and specification (see parts catalogue).

2.3.3 Transmission emergency function

After the transmission, emergency function has been switched on, the Car must immediately return to thepit lane. The Car is not permitted to leave the pit lane again until this function has been deactivated.

2.4 Brakes

Only Cars with brake calipers that correspond with the delivery conditions are permitted. It is not permittedto modify the Car to endurance brake calipers, or different pistons even if they might be listed in the parts catalog.

2.4.1 General description

Two independent brake circuits incorporating front and rear axle brake pressure sensors, Driver adjustable brake force distribution via brake balance system

Racing brake pads
Optimized brake ducts
Ergonomic brake pedal positioning

Derivative sensors & harness for retrofitting an ABS system
Only standard master brake cylinders are permitted for the 2 brake circuits on the
• Front axle: (diameter: 19.1 mm)
• Rear axle: (diameter: 17.8 mm).

Front axle:
• Aluminum 6-piston fixed calipers, one piece
• Internally vented steel brake discs, diameter = 380 mm, 32 mm thick mounted on aluminum disc bells

Rear axle:
• Aluminum 4-piston fixed calipers, one piece
• Internally vented steel brake discs, diameter = 380 mm, 32 mm thick mounted on aluminum disc bells

2.6 Wheel suspension

Forged control arms & top mounts:
Stiffness optimized.
Heavy-duty spherical bearings with dust protectionWheel
hubs with center-lock wheel nut
Shock absorbers with motorsport specific valve characteristic, non-adjustable
Double-blade-type adjustable anti-roll bars
Tire pressure monitoring system

2.6.1 General description front axle

Double wishbone front suspension, adjustable ride-height, camber and toe
Electric power steering with manual function to ease Car maneuvering

2.6.2 General description rear axle

Multi-link rear suspension, adjustable ride-height, camber and toe
Motorsport driveshafts optimized for reliability and durability

2.6.3 Allowed adjustments

The suspension is permitted to be modified within the scope of the specified setting range defined in the applicable, track specific Michelin Preco. All genuine parts must be retained.

Entrant must comply with tire operational requirements per SSR Attachment 3 at all times. Camber and pressure values may be altered at any time by the designated tire supplier by means of a Tire Manufacturer Bulletin.

A change to the maximum permissible combined thickness of the spacer washers in the front and rear axle control arms and/or camber values can be announced by IMSA Technical Bulletin at any time before or during any Event. It is permitted to fix the camber shims in position with aluminum tape.

All bearing points of the front and rear control arms must be left in the position and orientation in which they are delivered and specified in the Technical Manual. The adjustment of the eccentric screw at the front upper control arm mounting bracket, within its specified setting range, is permitted.

2.6.3 Anti-roll bars

The anti-roll bars are only permitted to be unhooked provided that one coupling rod of the respective rollbar is completely removed. Only the respective setting options given in the manual are permitted to be used.

The axial clearance of the anti-roll bars on the front and rear axles must be below 1.0mm. Designated shims shown in the spare parts catalogue are permitted to be used to compensate for the axial clearance.

2.6.4 Shock absorbers/springs

Only the factory-installed type shock absorbers and springs in their original condition are permitted to be used. The original delivery condition of the bump stops must not be modified in any way.

2.7 Wheels (flange + rim) and tires

2.7.1 General description

Single-piece light-alloy rims according to Porsche specification and design with center lock.

Front axle: 12J x 18 ET 23.5 mm
Treaded Michelin transportation tires; tire size: 30/65-18

Rear axle:
13J x 18 ET 44.5 mm
Treaded Michelin transportation tires; tire size: 31/71-18

Wheel Nut Left
9F1801141 or 9973313079A

Wheel Nut Right
9F1412158 or 9973313089A

2.7.2 Wheels

The use of any other wheels than the originally specified wheels is prohibited. All wheels must be fitted with original tire pressure and temperature sensors. Only the use of valve caps mentioned in the respective spareparts catalogue is mandatory and strictly enforced for all Races.
The rims are permitted to be painted. It is prohibited to paint or treat any functional surfaces (rim bed, contactarea of wheel nut, mounting surface of the wheel). The friction strips on the inside of the rim must stay functional and must not be treated in any way.

2.7.3 Tires

Only the version of Michelin tires approved for the Series with the following specification and supplied by the official supplier announced by IMSA is permitted to be used for the duration of the Events and the official test.

Slick tires
Front: 30/65 R 18 Porsche Cup N3Rear:
31/71 R 18 Porsche Cup N3 R

Rain tires
Front: 30/65 R 18 P2LRear:
31/71 R 18 P2L

Entrants must follow the recommendations and instructions of Michelin regarding tire pressures and set-up. It is permitted to remount tires, but the remounting must be performed by the official tire supplier. It is not permissible to rotate the tires on the rims. It is permitted to refit tires, but the refitting must be performed by the official Michelin tire supplier Should the tire manufacturer prescribe a rotational direction for its tires, then any departure from themanufacturer's recommendation is prohibited.

2.7.4 Tire marking: See Sporting Regulations Attachment 3
2.7.5 Tire damage: See Sporting Regulations Attachment 3
2.7.6 Treatment: See Sporting Regulations Attachment 3

2.8 Bodywork and dimensions

2.8.1 General description

Lightweight body featuring intelligent aluminum-steel composite design
Integrated (welded) roll-cage in accordance with FIA regulations (permitted for co-Driver usage on circuit Events)
Front cover with integrated quick-release fasteners; cooler exit-air duct and central air intake for cockpit ventilation
Removable rescue hatch in accordance with the latest FIA safety regulations
Mounting points for lifting device
Fenders with extensions
Widened front bumper with spoiler lip
Rear bodywork with integrated rain light in accordance with FIA regulations

Lightweight exterior:
Carbon-fiber reinforced plastic doors with quick release push button
Carbon-fiber reinforced plastic rear lid with integrated quick-release fasteners; removable
Carbon-fiber reinforced plastic adjustable rear wing with 'swan neck' mounting (11 positions)
Polycarbonate windows with hard coating
Rear underbody paneling with NACA ducts for brake, driveshaft and shift barrel actuator cooling

Modified 911 cockpit:
Carbon-fiber reinforced plastic interior trim panels
Ergonomic digital touch panel with multi-colour backlight aligned towards Driver
Multifunctional carbon-fiber reinforced plastic motorsport steering wheel with quick release coupling, shift paddles and illuminated push buttons
Adjustable steering column with steering angle sensor
Safety nets (centre and Driver´s side) in accordance with latest FIA safety regulations
Optimized cockpit ventilation featuring airflow directed at Driver
Racing bucket seat in accordance with FIA Standard 8862/2009:
Infinite longitudinal adjustment, two positions for height and inclination adjustment Padding system in three sizes to adapt seat to individual Drivers (delivered with size M)Preparation for seat ventilation
Six-point racing safety harness
FT3 safety fuel cell (approx. 110 litres) and dry break couplings for fueling and draining using a fully enclosed system
'Fuel-Cut-Off' safety valve in accordance with FIA regulations
Integrated air-jack system (three jacks) with valve mounting points on either side of the Car

Colors:
Body painted with water-based paint
Exterior: GT-silver-metallic (M7Z)
Interior: GT-silver-metallic (M7Z), without clear lacquer finish
Rims: Platinum semi-matt (0B5)
Rear wing in naked carbon

2.8.2 Overall Car dimensions and overhangs

Total length:	4,585 mm (180.51 inch)
Total width (front axle):	1,920 mm (75.59 inch)
Total width (rear axle):	1,902 mm (74.88 inch)
Wheelbase:	2,468 mm (97.16 inch)

The front overhang is 1,036.0 mm +/-15.0 mm, measured from the middle of the wheel of the front axle tothe leading edge of the Car (first point in the direction of the longitudinal axis, incl. front lip).

The rear overhang is 1,081.0 mm +/-15.0 mm, measured from the middle of the wheel of the rear axle to the rear edge of the Car (last point in the direction of the longitudinal axis, including the exhaust, rear wing excluded).

The wheelbase on the left and right sides of the Car is 2,468.0 mm +/-15.0 mm, measured at the centres ofthe wheel hubs.

2.8.3 External bodywork (including windows)

The delivery status of the bodywork must be preserved.

2.8.4 Windscreen

As a replacement to the original part, a heated windscreen as shown in the spare parts catalogue is permitted. The windscreen is permitted to be connected to the electrical system of the Car and the heating function is permitted to be used.

To protect the windscreen and as a safety measure, 'tear-off' screens are permitted to be attached to the windscreen. Fitting will be checked during technical scrutineering and must be removed where applicable on request of the IMSA.

To protect the windscreen and as a safety measure, 'tear-off' and Anti-fog screens are permitted to be attached to the windscreen. Fitting will be checked during technical scrutineering and must be removed whereapplicable on request of IMSA

2.8.5 Side and rear windows

Only the genuine Porsche 911 GT3 Cup side and rear windows in their original version are permissible.

Additionally, the rear window must remain fixed with the original type of fixing at all times.

2.8.6 Cockpit

Seat

The adaption of the seat by the addition of original Sabelt seat padding shown in green and blue in Attachment 6 is permitted
Each padding shape may only be used in the specific and correct location and direction as shown inattachment 6.

Additional padding at the head rest can only be added in accordance with the following conditions and the Technical Scrutineers discretion:

- The foam used for the padding must be the same material as the one used on the head rest by the seat manufacturer.
- The padding must be properly fixed to the seat.

Any modifications or addition of paddings outside of the prescriptions above must be presented to the Technical Scrutineers for approval.

A foamed seat insert, according to FIA Appendix J, Article 253-16, may be used as long as the insert is made of fireproof material, colored in black. The use or change is subject to approval by IMSA.

The original seat and seat mounting (seat rails and bracket) must be retained and must not be modified.

The provisions of FIA International Sporting Code Appendix J Article 253 - 16 must be complied with at all times.

Ventilation in the passenger compartment
Only the factory-fitted ventilation pipe (NACA-intake on the front opening hood) is permissible for cockpit ventilation. The ventilation of the windscreen must not be affected. For additional ventilation of the passenger compartment only the existing original ventilation openings in the rear back windows are permissible.

Safety nets
Every Car must be equipped with the valid after-sales safety nets as specified in the spare parts catalogue and mounted complying with the official Porsche AG mounting instructions.

2.8.7 Additional roof hatch accessories
The Car has an opening in the roof in order to make using the KED system easier should it become necessary to rescue the Driver.
The roof hatch is connected to the roof via 7 livelocks which must be accessible at all times (no foiling or painting of live locks is permitted).

2.8.8 Ground clearance of Car
The minimum ground clearance of the ready-to-drive Car (with the Driver in the Car and slick tires in compliance with Article 2.7, at 29 psi ±0.5 psi air pressure) must not be less than the specified dimension,as measured at the specified measuring points, at any time during the Event.

For the entire duration of the Event the ground clearance of the front axle is to be a minimum of 72.0 mm and the clearance at the rear axle a minimum of 106.0 mm. The measuring points (see Attachment 5) at the front axle are the mounting bolts of the cross member/bodywork in relation to the reference surface and the machined rear surface in the direction of travel on the side section of the rear axle in relation to the referencesurface. The ground clearance is permitted to be changed within the existing adjustment range. Failure to meet the minimum ground clearance is a violation of the RULES.

2.8.9 The minimum ground clearance for the front axle, given in Art. 2.8.8 of the Technical Regulations, must be achieved with undamaged and unmodified mounting bolts (part number N91253401). The height of an undamaged and unmodified mounting bolt head will be defined as 14.9 mm. If the height of the mounting bolt heads, fitted to the car during the ground clearance measurement, measures less than 14.9 mm, the difference will be taken into account**.**

2.8.10 Measuring method
The minimum ground clearance of the ready-to-drive Car is checked using a measuring plate and appropriate height gauges for the axle to be measured in each case. The measurement is checked with the ready-to-drive Car incl. the Driver (Or substituted Official Driver Weight) on board, standing on the measuringplate. If the measuring gauges can be accessed under the measuring points described above, the requirement to comply with the minimum height is satisfied. Any measuring tolerances will be taken into account by IMSA.

IMSA may at any time in their absolute discretion check the ground clearance measurement with any set of tires allocated to the respective competition number used during the session that the check is performed during or

after. IMSA may also use instruments such as calipers or depth gauges to determine the Car ground clearance.

2.8.11 Measurement location

The measurement is conducted on the measuring plate during technical scrutineering. The measuring plate is available to the participating teams to check the minimum ground clearance during this period after consultation with IMSA.

2.9 Aerodynamic devices

The original position of the wing section is permitted to be changed within the specified scope in the Technical Manual (Using only matching numbered position holes in conjunction with each other) for adjustment.

Furthermore, it is permitted to tape over the full area of the headlight lenses with transparent Heli tape, without thereby taping over a slot in the bodywork.

Apart from the above, taping over of any slots in the bodywork, wings or other permanent parts, joints and openings is not permitted.

Any alteration or amendment outside the above set parameters will render the Car non-compliant with the Technical Regulations and may be subject to penalties from IMSA.

The use of the front air scoop (part numbers 9F1.407.811 and 9F1.407.812) is mandatory for each event.

Rear Brake Ducts: It is permitted to secure the two halves of the air duct element (part numbers 9F1.615.457, 9F1.615.458, 9F1.615.447 and 9F1.615.448), using a maximum of 3 cable ties around the each whole element, to prevent their separation

If a session is declared as a wet session it is permitted to close all slots on the rear side windows with transparent heli tape.

2.10 Electrical equipment

General description

10.3” Porsche color display
Porsche logger
Porsche power box
Fire extinguisher system (extinguishing agent: NOVEC gas)
Lightweight 12 V, 60 Ah battery (LiFePO4) leak-proof, installed in co-Driver’s footwell
Digital touch panel with multi-color backlight
175 A alternator
Single-arm windscreen wiper with direct drive (intermittent and continuous operation)
Three additional center console switches for additional power consumers Data connection (data logger, video system)

LED Lighting system

Main headlights Daytime running lightsTaillights
Rainlight in compliance with FIA homologation regulation

The usage of the following electrical equipment out of the spare parts catalogue is required:
• 9F2927748 AS SENSOR GPS

The use of a charging cable is optional. The permitted part number is

- MTH000116A – AS Charging cable (installation according to latest published mounting instructions)

It is not permitted at any time for any Entrant to read any sensors, with any equipment, which are not allocated to the Entrant's own Team. Any Entrant breaching this regulation may be disqualified from the relevant session, Race, or competition.

Entrants are not permitted to install additional electronic system/s such as lap timers, aftermarket data systems, displays, etc. Any installation of additional components must be approved in writing by IMSA prior to arrival at an Event.

2.10.1 : Yellow Light Kit: Cars must be equipped with the MSE Yellow Light Kit to indicate active flag status, purchased from the approved supplier.

2.10.2 The Kit contains the following components:

- Yellow indicator light
- Antenna
- Wiring loom and instructions
  - The safety light system must be installed and functioning during on-track activity (See Attachment 8for detail).
  - The yellow indicator light must be prominently installed within the cockpit, in clear line of sight of the Driver.
  - The supplied antenna must be mounted on the Car roof, following the diagram below (a ground plane is not required):

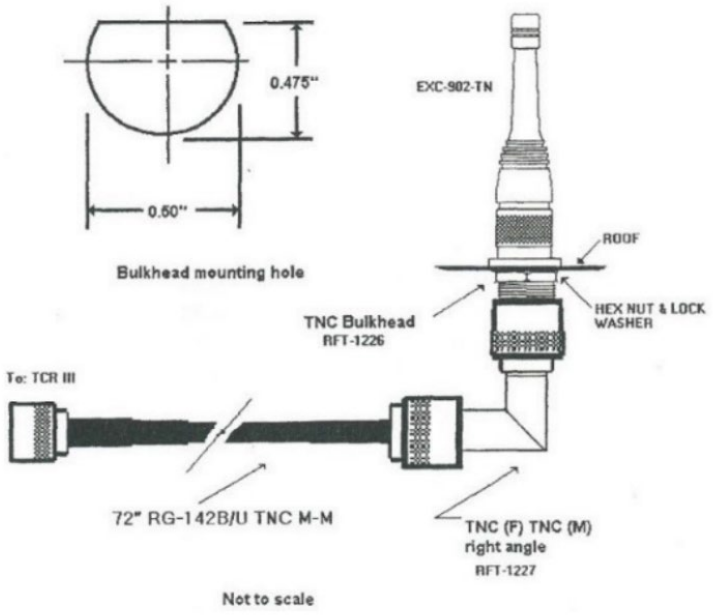

- Wiring Loom Installation: The Wiring Loom has a flying lead input for +12 VDC and Ground to interface with additional wiring referenced in the installation instructions.
- Entrants must supply additional wiring as required.

2.10.3 : Transponder X2 System

- Each Car is to be fitted with an approved hard-wired timing transponder (See Attachment 7).
  - Must be fitted in the approved manner and location.
    Must be fitted in the right front wheel well.

2.10.4 : Impact Data Reorder

- Entrants must utilize the FIA Impact Data Recorder (IDR) which IMSA will provide.
- Must be installed in the Manufacturer defined location and consistent with Manufacturer orientation requirements flat on the top of the tunnel next to the driver seat
- IDR must be installed and functional for all on-track activity.
- Data collected by the IDR is property of IMSA.
- IDR must be surrendered upon request by IMSA

2.10.5 In Car Camera/Data:

- Only in-board or on-board cameras which have been approved by IMSAand/or sporting matters and TV purposes are permitted to be used.
- System must be installed per the Porsche camera system manual.
- IMSA reserves the right to impound any in-Car camera footage for any purpose.
- A team may be required to fit and use cameras as assigned and provided by IMSA.
- Team must execute and maintain a current media rights and usage license per IMSA RULES.
- The approved system is as follows:

Part Number	Item	Quantity
RLACS222	VBOX Video 1080p Camera for use with VBOX Video HD2 -3m	2
RLACS260	Roll Cage Camera Mount	2
RLACS270	Heavy-Duty Camera Clamp for HD2	2
RLACS262	GPS Low Profile Antenna with RG-174 & SMA -3m	1
RLACS221	VBOX Video HD2 Mono Microphone -2.5m	1
	Porsche Vbox Video HD2 Mounting Bracket	1
999.703.504.00	AV-mounts	10
WHS.001.793	Nuts	10
WC-ADC_DTM_Vbox	PORSCHE 992 GT3 CUP VBOX VIDEO CAN/POWER CABLE	1
RLACS273	Camera Mount Extension forCamera1	1

2.11 Fuel circuit

Only the fuel system permitted for the Porsche 911 GT3 Cup Car of model year 2021 is permitted to beinstalled.

A. <u>Entrants must equip the Car with the approved self-sealing connector for extraction of fuelsamples:</u>

- Approved connector: Staubli P/N: CBI06.7251/IA/JKV.
- Must be located immediately before the injector nozzles.
- Installation must be approved by IMSA.

The running of the Car using the service position of the fuel pumps is prohibited, unless there is a technical issue with the system. The system may not be used with any of the pumps switched to service position for more than one lap.

2.13 Data transfer

The use of radio-based information transmission in the vehicle (e. g. telemetry) is forbidden, the only exceptionis the usage of the built-in tire pressure monitoring system, which uses radio transmission for its functionality.

2.13.1 Radio system

Entrants may install a single two-way voice radio with Car-to-pit communication capability in compliance with the corresponding Series Sporting Regulations.

- Radio must be mounted securely to a metal surface using metal hardware. It is suggested that the mounting location be on the passenger side of the tunnel behind the battery master switch and chassis harness.

2.13.2 Data recording

Use of the factory-fitted data recording system manufactured by COSWORTH is compulsory. The COSWORTH system is assigned to the Car's chassis number and must not be exchanged without consent from IMSA. Only the setups approved by Porsche AG are permitted to be used for the duration of the Event.

All recorded data relating to the competition must be made available to IMSA.

Any additional electrical connection to the Car's wiring harness is not permitted. Installations set up by IMSAare exceptions to this rule. Where the IMSA or Porsche requires an additional part or system to be fitted for development purposes, the competitor is not permitted to access any of the associated data unless specific agreement is given in writing by IMSA.

2.14 Miscellaneous

2.14.1 Seal Locations

The following seals are affixed at the works:

• Engine:

A. Valve cover, left (1x)
B. Valve cover, right (1x)
C. Oil pump bottom (1x)
D. Engine control unit: Connector for control unit wiring harness (2x)

E. Gearbox:
   - Differential cover wire seal or RFID seal (1x)
   - Gear housing (Connecting front and rear) (1x)

If seals and marks are applied to the Car by IMSA or Porsche, these must not be damaged, changed or reproduced. If one or more damaged or missing seals or markings are discovered, the Car can be disqualified from the Event.

If any of the seals on the engine control unit are opened to allow welding work to be carried out, the control unit must then be taken to IMSA for an additional inspection and then be resealed, without being requested to do so. The removed seal(s) must be handed over to IMSA.

Seals that have fallen off during the Race or are damaged must be notified to IMSA in writing no later than one hour after closure of the “Parc Fermé”.

2.14.2 Electronic Car configuration
Throughout each Event, the Car must be run with the following configuration settings:
• traction control and ABS variant “Basis” and the logged channel “log_car_variant” with the value “1” visiblein the display

2.14.3 Exhaust system setting on standard with “CW_SILENCE” visible in Racecon” and the logged channel “B_silence_pt” both with the value “0”

2.14.4 Notes
Everything that is not expressly permitted in these Regulations is prohibited. Any addition or removal of material, heat treatment or coating to alter the properties of a part or component and/or its dimensions is forbidden. Mounting a part in a different way or location than the original delivery condition is forbidden. Permitted modifications must not result in any illegal modifications or infringements of the Regulations. Any permitted changes may only serve the intended purpose. The decision of IMSA shall be final regarding any interpretation of these Regulations. The IMSA reserves the right to amend and extend these rules

Attachment 1-Ballast Mounting Plate

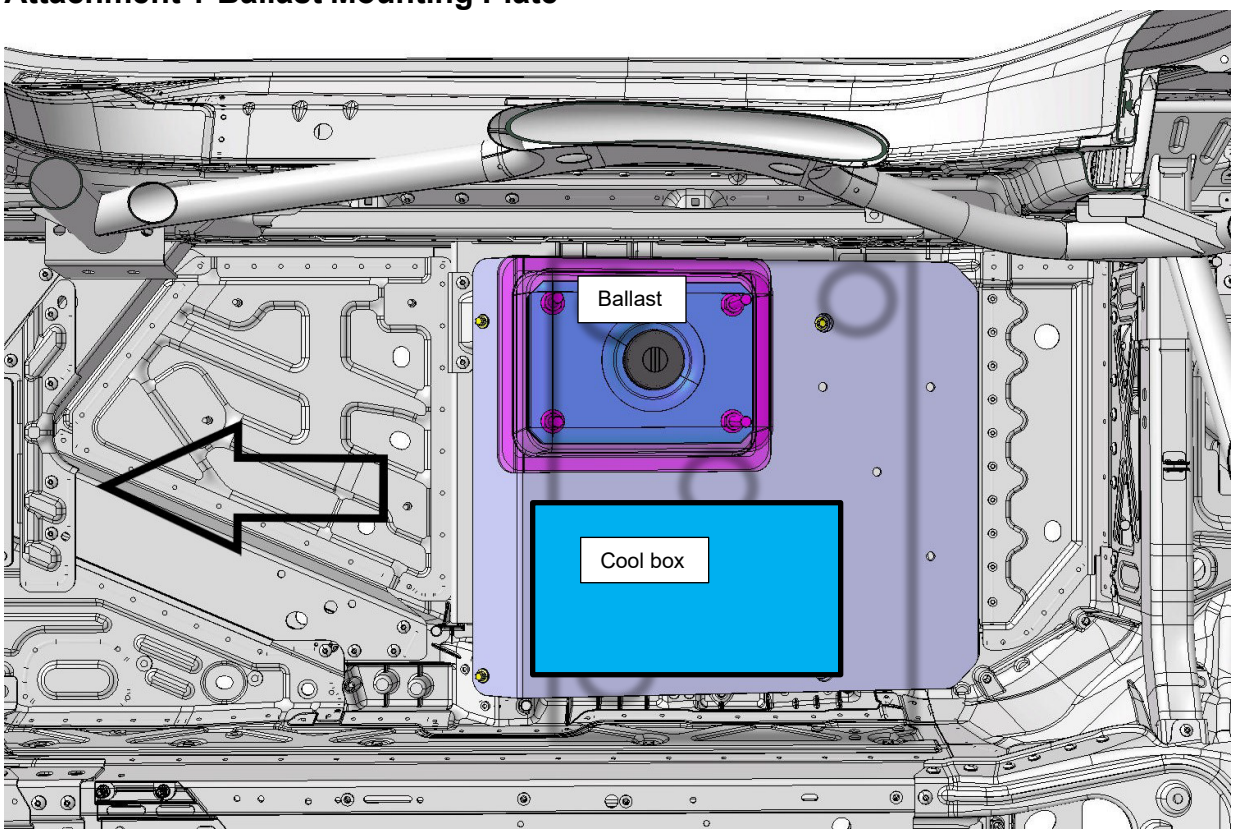

992 Ballast components:

Part	Qty	Part Number
BASE PLATE AUXILIARY WEIGHT	1	9F1882378
THREADED BOLT M12X1.5	5	WHS001902
HEX NUT M12X1.5	5	WHS001904
HEXAGON NUT M 12X1,5	5	N 0150816
TORX SCREW M10X28-TC 10.9	4	WHT007483
ADDITIONAL WEIGHT 6,8KG/20MM		9F1801141B
ADDITIONAL WEIGHT 2KG/6MM		9F1801141A
ADDITIONAL WEIGHT 2KG/6MM		9F1801141
NUT FOR COVER	1	WHS001903

The following 991 components are also permitted:

Part	Qty	Part Number
WASHER 10,5X25	4	99902526402
TORX SCREW M10X40 10.9	4	9A700744300
THREADED BOLT	5	9975048429A
HEX-HEAD NUT M12X1,5	5	90038001001
HEXAGON NUT M 12X1,5	5	N 0150816

COVERING AUXILIARY WEIGHT	1	9915048659B
KNURLED NUT COVERING	1	9915048529B
COVERING AUXILIARY WEIGHT	1	9915048657A
AUXILIARY WEIGHT 2KG/6MM		99150484800
AUXIALIARY WEIGHT 3,5KG/10MM		99150484801
AUXILIARY WEIGHT 6,8KG/20MM		99150484802

Attachment 3-Minimum ground clearance, front and rear axle

Positionen Fahrhöhenmesspunkte/ *ride height measuring positions*

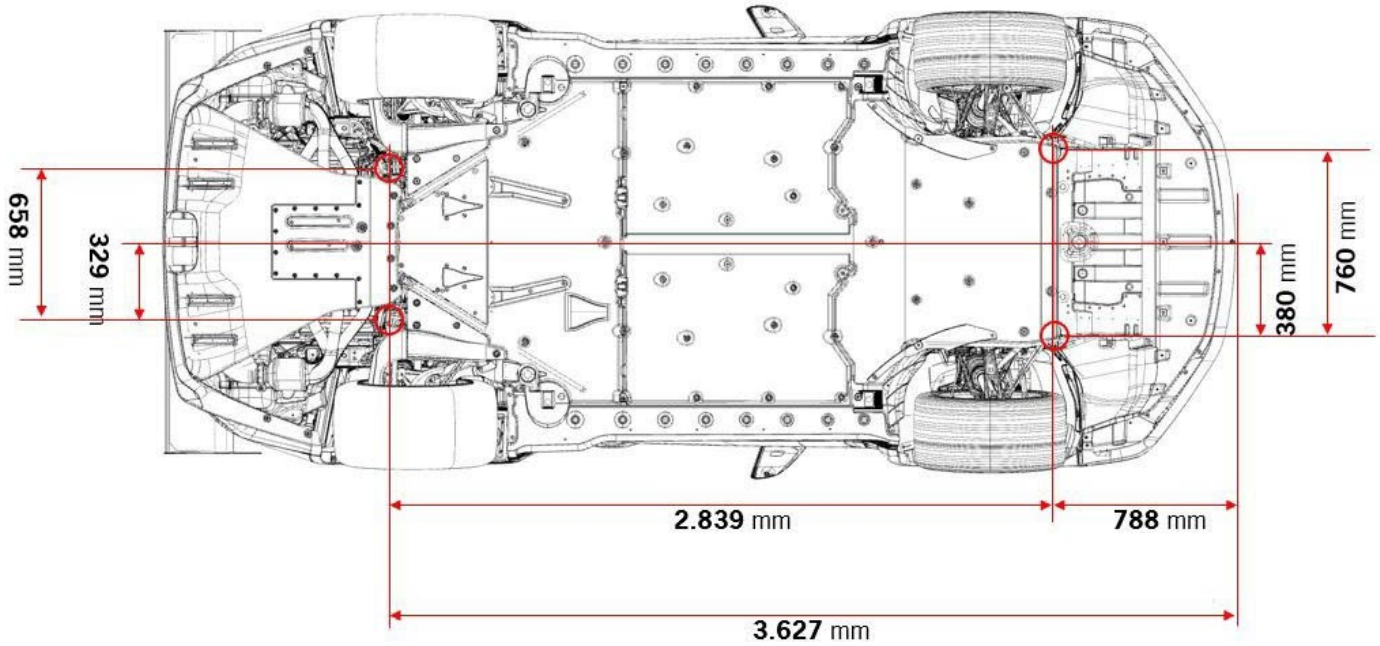

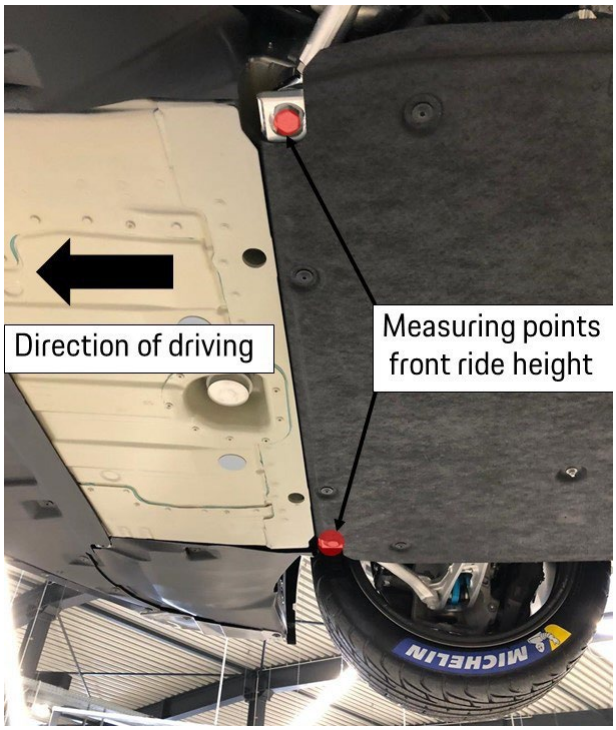

Attachment 4-Differential lock ramp breakover angle

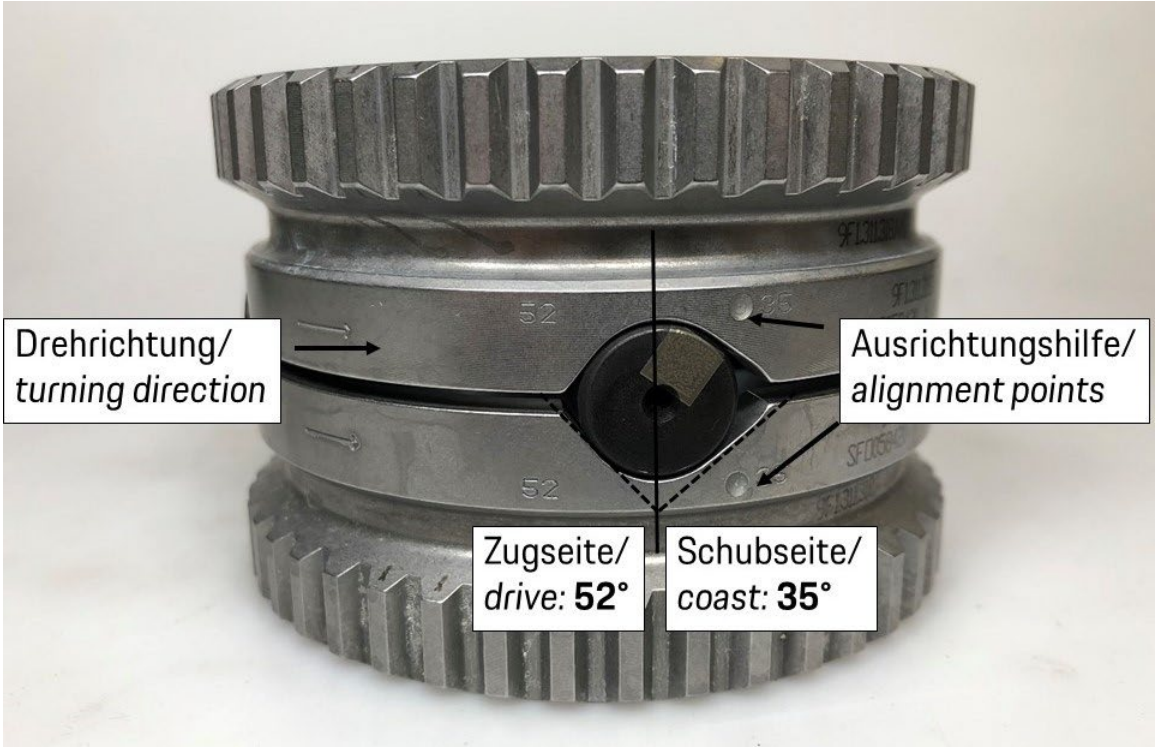

Attachment 6-Seat Padding

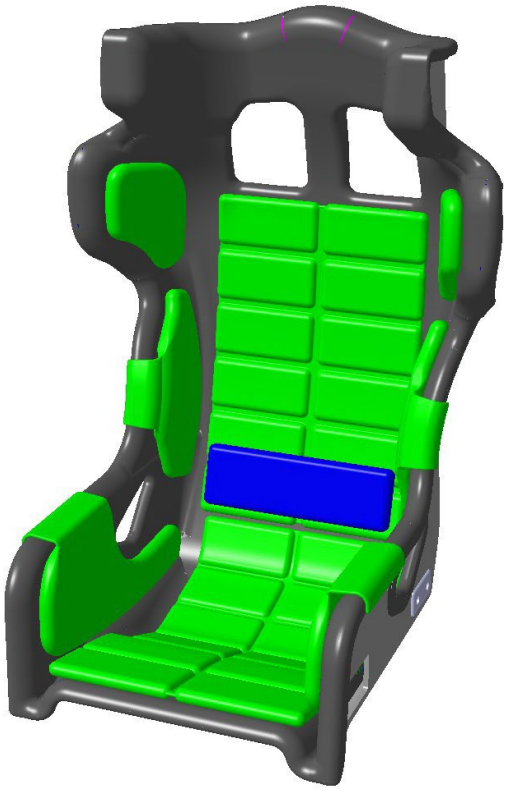

Attachment 7-Transponder Mounting Position

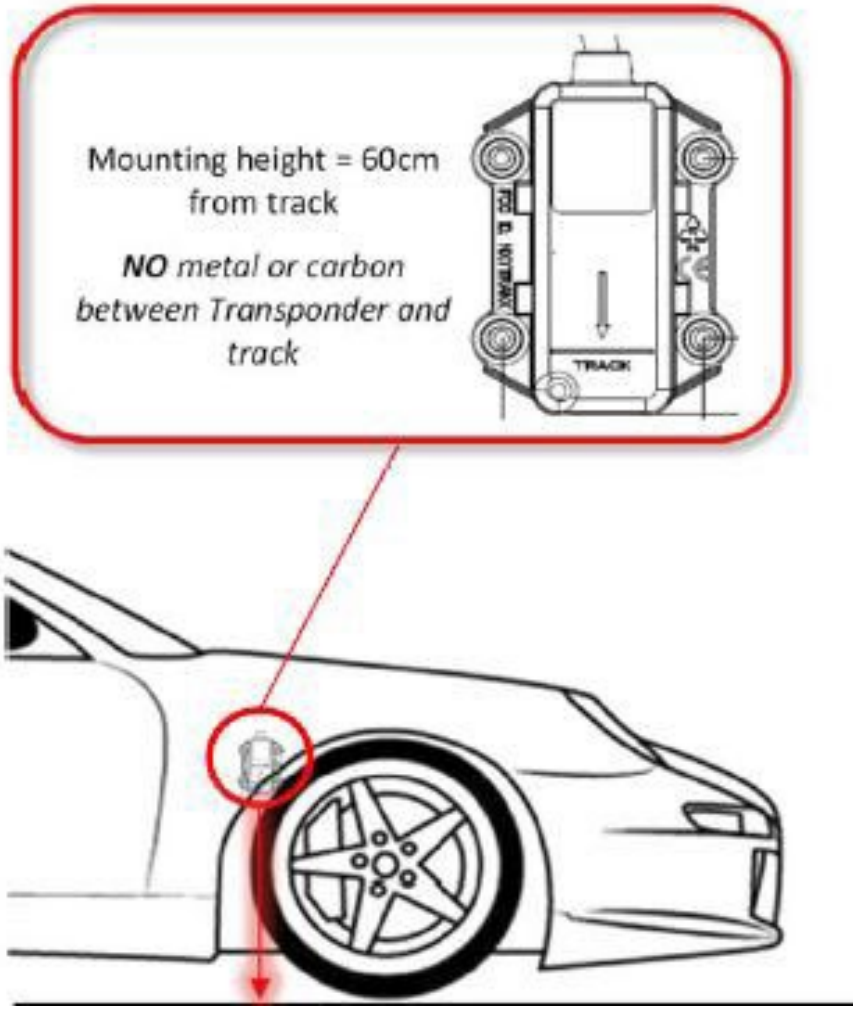

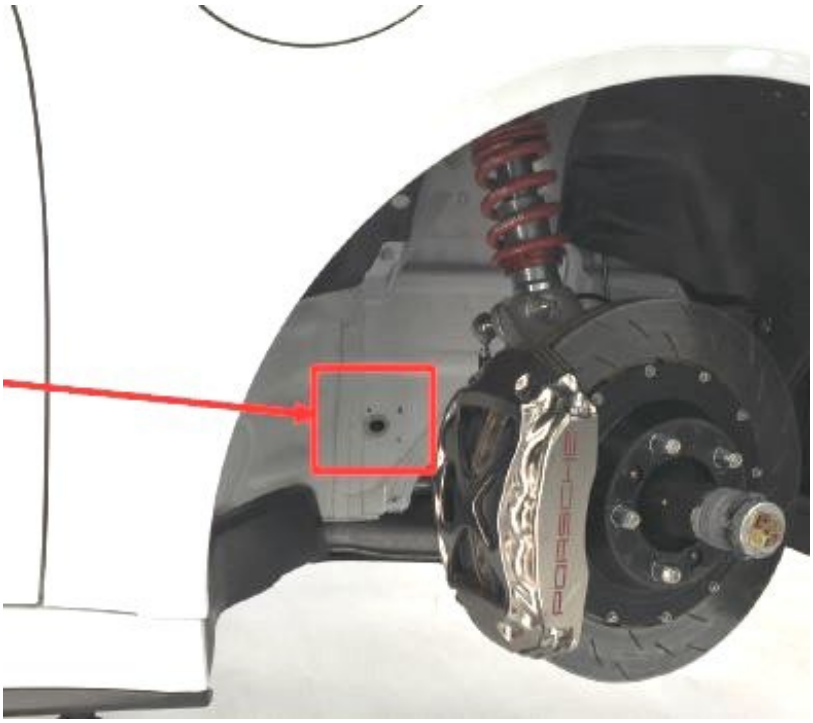

Attachment 8-Yellow Light System

Antenna Installation: The supplied antenna must be mounted:

1. On the Car roof as per Article 9
2. Away from other antennae
3. Following the diagram below (a ground plane is not required):

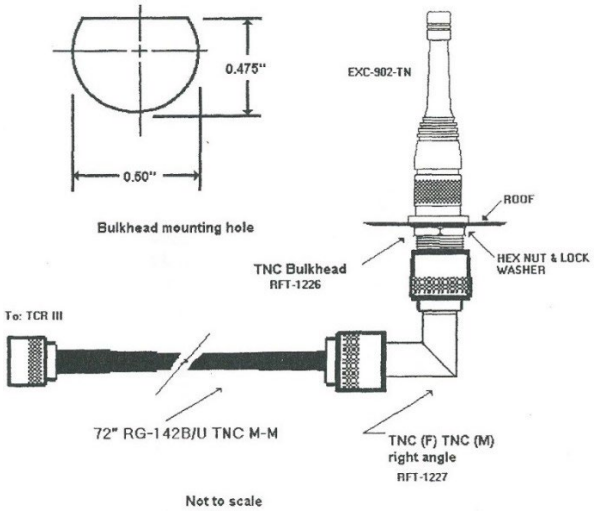

Attachment 9 - Antenna Locations