INTERNATIONAL MOTOR SPORTS ASSOCIATION

One Daytona Blvd.
Daytona Beach, FL 32114
(O) +1 (386) 310-6500
www.imsa.com

AUTOMOBILE CLUB DE L'OUEST

Circuit des 24 Heures
CS21928
72019 Le Mans Cedex 2
www.lemans.org

LMDh

APPENDICES TO THE TECHNICAL REGULATIONS
Revision Date: October 19th 2026

Table of contents

ARTICLE 0: FOREWORD 3
ARTICLE 3: BODYWORK AND DIMENSIONS 4
3.9 Aerodynamic Homologation Guidelines 4
ARTICLE 5: POWER UNIT 4
5.1.2 Powertrain performance 4
ARTICLE 6: FUEL SYSTEM 5
6.8 Energy per stint- regulatory philosophy 5
ARTICLE 8: ELECTRICAL SYSTEMS 6
8.4 ACO/IMSA Logging Requirements 6
8.5 Data acquisition 7
8.6 Additional IMSA specific logged channels: 8
8.7 Sensor calibration 8
8.8 Track signal information display 11
ARTICLE 9: TRANSMISSION 13
9.8 Gear Changing (IMSA only) 13
9.11 Differential performance (*) 13
ARTICLE 13: COCKPIT AND SURVIVAL CELL 14
13.18 Survival cell identification 14
ARTICLE 14: SAFETY EQUIPEMENT 15
14.32 Accident data recorders (ADR) and high-speed accident cameras – For ACO competition only 15
ARTICLE 15: SAFETY STRUCTURES 15
15.2.3 Supplementary panel 15
ARTICLE 16: MATERIALS 15
16.1 General 15
ARTICLE 19: HOMOLOGATION 15
19.1 General 15
19.2 CAD files for homologation 15
19.4 Homologation form 15
19.5 Centre of Gravity and Chassis Inertia Measurement 15
19.6 Homologation wind tunnel booking 15
APPENDIX A: REFUELLING FOR ACO COMPETITIONS 15
APPENDIX B: REFUELLING FOR IMSA COMPETITIONS 18
APPENDIX C: SCRUTINEERING 23
3.5.9 Skid Block (applies to IMSA only) 23
APPENDIX D: LMDh Technical Directives 24

ARTICLE 0: FOREWORD

	SPINE	LMDh common parts	LMDh constructor specific	LMDh manufacturer specific
Complete survival cell				
Bare survival cell	✓			
Windscreen	✓			
Survival cell hatches	✓			
Survival cell styling fairing	✗	✗	✗	✓
Complete doors and opening mechanisms	✓			
Extinguisher	✓			
Seat and belts	✓			
Headrest	✓			
Ballast support	✓			
Chassis electronic equipement	*See Electronics*			
Drink and windscreen washer system	*See Electronics*			
Neutral system	*See Electronics*			
Leg padding	✓			
Complete wiper system	*See Electronics*			
Chassis loom	*See Electronics*			
Pedals assy	✓			
Brake master cylinder and balance system	✗	✗	✓	
Air conditionning system	✗	✗	✗	✓
Fuel tank system				
Bladder	✓			
Pumps, filters, lines	✓			
Car fuel coupling	✓			
Collector	✓			
Airjack system	✓			
Steering				
Complete steering rack and ECU	✓			
Complete steeing column and brackets	✓			
Steering wheel	✗	✗	✗	✓
Wheel				
Rims	✗	✗	✗	✓

	SPINE	LMDh common parts	LMDh constructor specific	LMDh manufacturer specific
Complete front suspension				
Set of damper clevis	✗	✗	✓	
Set of corner dampers	✗	✗	✓	
3rd element system (including damper)	✗	✗	✓	
Antiroll bar system	✓			
Antiroll bar adjusting system	✗	✗	✓	
Springs or torsion bars	✓			
Rocker	✓			
Set of inboard wishbone brackets	✓			
Set of wishbones, thethers	✓			
Pushrod, steering rod	✓			
Set of complete uprights	✓			
Set of upright brake cooling (excl. disk/bell/pad)	✗	✗	✗	✓
Set of brake calipers	✗	✗	✓	
Brake disk/bell/pad material incl. vent design	✗	✗	✗	✓
Wheel nuts	✓			
Complete rear suspension				
Set of damper clevis	✗	✗	✓	
Set of corner dampers	✗	✗	✓	
3rd element system (including damper)	✗	✗	✓	
Antiroll bar system	✓			
Antiroll bar adjusting system	✗	✗	✓	
Springs or torsion bars	✓			
Rocker	✓			
Set of inboard wishbone brackets	✓			
Set of wishbones, thethers	✓			
Pushrod, toe-link	✓			
Set of complete uprights	✓			
Set of upright brake cooling (excl. disk/bell/pad)	✗	✗	✗	✓
Set of brake calipers	✗	✗	✓	
Brake disk/bell/pad material incl. vent design	✗	✗	✗	✓
Wheel nuts	✓			

	SPINE	LMDh common parts	LMDh constructor specific	LMDh manufacturer specific
Engine adaptation				
Complete radiator inlets	✗	✗	✗	✓
Engine coolers (water and oil)	✗	✗	✗	✓
Engine cooler lines	✗	✗	✗	✓
Engine oil and water tank	✗	✗	✗	✓
Clutch and actuation system	✗	✗	✗	✓
Complete exhaust	✗	✗	✗	✓
Complete bellhousing				
Bare bellhousing	✗	✗	✗	✓
Studs	✗	✗	✗	✓
Hybrid system				
Hybrid coolers	✗	✗	✗	✓
Complete gearbox				
LMDh gearbox (*)	✓			
(*) difference with LMP2 gearbox: ring gear cover, ring gear, hybrid gearing and casing				
Gear ratios	✗	✗	✗	✓
Gearbox cooling	✗	✗	✗	✓
Driveshaft	✗	✗	✓	
Bodywork				
Front and rear crash structures	✓			
Complete front block assy (without crashbox)	✗	✗	✗	✓
Rear Wing	✗	✗	✗	✓
Elephant foot with mirrors	✗	✗	✗	✓
Sidepods	✗	✗	✗	✓
Engine cover	✗	✗	✗	✓
Complete floor and diffuser (*)	✗	✗	✗	✓
(*) difference with LMP2: may differ on junctions with bodywo				
Complete plank	✗	✗	✗	✓
Complete rear block assys (without crashbox)	✗	✗	✗	✓

	SPINE	LMDh common parts	LMDh constructor specific	LMDh manufacturer specific
Stylization				
Front lights	✗	✗	✗	✓
Rear lights	✗	✗	✗	✓
Steering wheel (*)	✗	✗	✗	✓
(*) Steering columns crash test to be done				
Engine				
ECU and ECU logger	✗	✗	✗	✓
Engine control modules (ignition, injector, turbo…)	✗	✗	✗	✓
Engine looms	✗	✗	✗	✓
Engine sensors	✗	✗	✗	✓
Engine actuators	✗	✗	✗	✓
Chassis				
Switch panel	✗	✗	✗	✓
Power distribution	✗	✗	✓	
Chassis logging	✗	✗	✓	
Chassis looms	✗	✗	✗	✓
Chassis sensors	✗	✗	✓	
Complete wiper system	✓			
Safety circuit and switches (neutral, extinguisher…)	✓			
Drink and windscreen washer system	✓			
Fuel pumps	*See Spine*			
Rear view camera	✓			
Gearbox compressor	✓			
Cockpit blower	✓			
Power steering	*See Spine*			
Buffer battery	✗	✗	✓	

	SPINE	LMDh common parts	LMDh constructor specific	LMDh manufacturer specific
Hybrid (*)				
(*) all those parts are common to all constructors				
MGU	✗	✓		
MCU	✗	✓		
DC-DC	✗	✓		
ESS (including ESS closing panel)	✗	✓		
BBW	✗	✓		
HCU	✗	✓		
Hybrid looms	✗	✓		
Hybrid sensors	✗	✓		
Coolant pump	✗	✓		
Scrutineering common (*)				
(*) all those parts are common to all constructors				
Torque meter	✗	✓		
Timing transpondors	✗	✓		
Scrutineering WEC (*)				
(*) all those parts are common to all constructors				
WEC FFM	✗	✓		
WEC scrutineering system (logger, sensors, ADR, telemetry…	✗	✓		
WEC Marshalling system	✗	✓		
WEC Safety and medical lights	✗	✓		
WEC leader lights or panel	✗	✓		
WEC TV camera integration	✗	✓		
Scrutineering IMSA (*)				
(*) all those parts are common to all constructors				
IMSA FFM	✗	✓		
IMSA scrutineering system (logger, sensors, ADR, telemetry	✗	✓		
IMSA Marshalling system	✗	✓		
WEC Safety and medical lights	✗	✓		
IMSA leader lights	✗	✓		
IMSA TV camera integration	✗	✓		

ARTICLE 3: BODYWORK AND DIMENSIONS

ARTICLE 5: POWER UNIT

5.1.2 Powertrain performance

On track POWER must be respected whatever the ambient conditions. It is the duty of the competitor to calibrate its powertrain in order to respect the Technical Regulations' prescriptions.

POWER check:

- The power will be monitored using the homologated torque sensors fitted on each driveshaft.
- For each sample the filtered Left and Right torques will be summed.
- The Power=f(N) curve will be calculated with the following formula:

$$Power\ (t) = \left(M_{RearRightWheel}\ (t) \cdot N_{RearRightWheel}\ (t) + M_{RearLeftWheel}\ (t) \cdot N_{RearLefttWheel}\ (t)\right) \cdot \frac{\pi}{30000}$$

The reference engine speed "N" [rpm] will also be taken at time "t". M refers to the offset torque [Nm].
Power(t) [kW], N(t) and the remainder channels sampling and filtering as detailed in the Electronic General Information (Article 8 of these Appendixes).

This corrected power curve will be compared to the data from the Technical Regulations using the logic described in the graphs below. To cover any uncontrolled or unexpected exceeding of the power limit, a maximum integral above this limit in kJ will be permitted with a down slope in kJ/s (see series specific control diagrams for details).
The main channel used for monitoring will be PowerIllegal: Integral of the instances of power above limit, decreased by a constant slope when Power is under the limit.
Strategies that result in power levels exceeding the maximum limit (as defined in the series specific control diagrams) are not permitted

- Examples include but are not limited to; exploiting the Integration rate

MAXIMUM POWER CONTROL

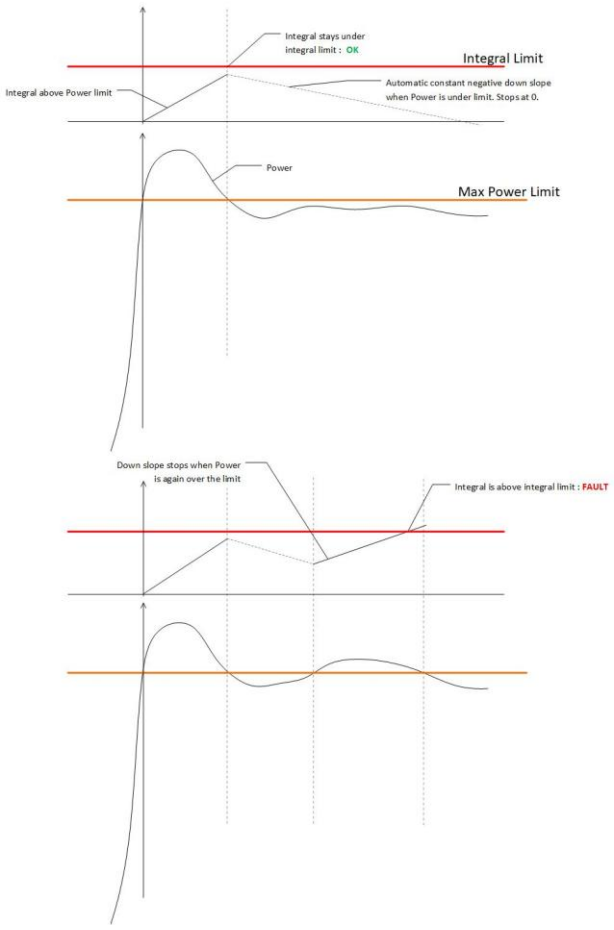

ARTICLE 6: FUEL SYSTEM

6.8 Energy per stint- regulatory philosophy

The text below has no regulatory bearing and is provided as guidance only:
Stint lengths are balanced through a Virtual Tank which contains the available permitted energy. This Virtual Tank starts the race full and is depleted by the power used over time as measured by the driveshaft torque sensors. Before the Virtual Tank is empty, the car must stop in the pits to replenish the energy for their next stint. The energy is replenished at a fixed rate when the fuel probe is connected to the car. At no point in the race is the Virtual Tank permitted to drop below 0%, if this happens, they will be required to replenish the extra energy used and serve a penalty.

ARTICLE 8: ELECTRICAL SYSTEMS

- **General information for WEC competition:**
  https://fiabox.fia.com/views/public/lienPublic.xhtml?id=3319&hash=5ec957af1175ab59c872ef17270e301083500c77
  Password: available upon request

  Control diagrams:
  https://fiabox.fia.com/views/public/lienPublic.xhtml?id=8655&hash=c677d6571b03e03f9a5e6c39f8fd3543ed909d4c
  Password: available upon request

- **General information for IMSA competition:**
  - GTP Scrutineering System Manual (see latest version)
  - GTP Scrutineering System DBC Files (see latest version)
  - GTP Mandatory Electronics Ordering (see latest version)
  - Regulatory Control Diagrams are available on request to IMSA technical staff (imsaengineering@imsa.com)

  - Cars must be equipped with the IMSA Scrutineering Data System at all Events.
    a. The manual for the Scrutineering Data System for the Class is the Bosch Scrutineering Systems Manual (BSSM).
       i. Entrant must use the most current version of the BSSM as posted to the IMSA Competitor site.
       ii. Entrant must use all sensors, parts, and equipment as specified in the BSSM.
    b. Scrutineering system components must be purchased from, or supplied by, the approved sources listed in the BSSM.
    c. The scrutineering system and all its components are standalone and intended for IMSA use.
    d. Entrants must install, utilize, and maintain other sensor(s) as required by IMSA.
  - All components of the Scrutineering System, and other sensors as required by IMSA, must remain powered and functional during on-track sessions and pit stops.
  - Entrants must complete IMSA Scrutineering Sensor Declaration Form no later than 5 days before load-in day of every Event.
  - Scrutineering system components and sensors must be installed as Homologated
    a. Fuel Flow Sensor must have a valid calibration for the entire duration of all IMSA Sanctioned Events.
       i. Fuel Flow Sensor calibration expires at the end of each Season.
       ii. Entrants are responsible for ensuring the sensor is recalibrated at the beginning of each Season.
    b. Scrutineering Telemetry System
       i. Transmitter and antenna must be installed as Homologated.
    c. Wiring loom must be as Homologated.
  - CAN channels must be configured per the applicable DBC file posted in the regulation section of IMSA Competitor site.
    a. Entrants must provide CAN channels from the ECU, chassis logger, or equivalent device per the CAN specification detailed in the applicable DBC.
    b. CAN communication to the IMSA Scrutineering Logger must be transmitted directly from the device of origin, and not repeated through a 3rd party device, unless explicitly permitted by IMSA.
    c. Scrutineering sensors take precedence over CAN provided values from the ECU or chassis logger.
    d. Scrutineering sensor outputs are provided to the Entrant over a Public CAN bus.
    e. A Public CAN Declaration Form must be submitted and approved by IMSA for any public CAN bus usage beyond Series Scrutineering Sensors and messages.
  - Series Scrutineering Data System inspection and data collection requirements are:
    a. Entrants must present all series mandated data collection media to the IMSA Technical Inspection trailer within thirty (30) minutes of the completion of each session.
       i. For instances of less than 60 minutes from the end of a Session and the start of the next Session, Entrant must return both Session's data collection media within thirty (30) minutes of the completion of the second Session.
    b. Series Scrutineering Data Logger must be installed and tested prior to Safety Inspection.
       i. Entrant may be required to install USB Stick during inspection process at the direction of series officials.
  - Scrutineering system primary component units must have an IMSA Scrutineering Seal.
    a. Each device ordered through Bosch Motorsport NA using the order form found in the Scrutineering System Manual will be delivered with the seal in place.

8.4 ACO/IMSA Logging Requirements

Connected Directly to scrutineering logger:

- Wheel Speeds
- ICE Speed
- Driveshaft Torquemeters
- Fuel Flow Meter (FFM)
- Drivers Throttle Pedal Sensor (1 track of 3 track sensor)
- Lap Trigger (Transponder) Two X2 transponders are fitted each on a different CAN bus they are arbitrated by the scrutineering logger and a high priority CAN message sent to the Team ECU
- Lambda Sensors
- Boost Pressure/Manifold Pressure (depending on engine spec)
- Air Charge Temperature (WEC: PT1000 or IMSA: Bosch specification)
- Fuel Tank Temperature (PT1000)
- Fuel Tank Pressure
- Fuel Pressure before Fuel Flow Meter
- Refuelling Coupling Sensor - sensor defined by the constructor to be compatible with Scrutineering logger input
- Oil catch tank level sensor
- Cockpit Internal Temperature (WEC: PT1000 or IMSA: Bosch specification)
- GPS antenna
- Vehicle Motion Position Sensor (IMSA only)
- Air jack pressure
- Front and Rear ARB Actuator Position Sensors (displacement or rotary)

Mandatory Sensors for which data must be sent via CAN to scrutineering Logger:
- Fuel Pressure (For clarity, also known as injector rail pressure)
- Pitot Pressure (exception can be made in rain conditions)
- Damper Travel
- Pushrod Load Cells
- Laser Ride Heights (3 in total, 2 Front-1 Rear)
- Headrest Locking Sensors
- Engine Throttle Position
- Any other sensor deemed necessary

All sensors measured by scrutineering logger will be available via CAN (two public CAN buses available to allow for data to team ECU and transfer of telemetry values).

8.5 Data acquisition

All Sensors must be homologated on the car and only homologated Sensors are permitted
List of Sensors that may be homologated on the car (Any sensor on the car may be required to be sent to scrutineering logger)

- ICE torque (may be used in case of single rear driveshaft torque failure to synthesize failed sensor value) – must be connected directly to the scrutineering logger CAN bus
- Wheel speeds
- Accelerometers for ICE knock control
- Any temperature sensors
- Any pressure sensors (except of in-cylinder pressure sensors)
- Any voltage and/or current sensors
- Any electrical insulation measurement sensors
- Any switches or dials used by the driver
- Pedal box locking sensor
- Emotor position and speed
- Throttle Position
- Engine crankshaft and camshaft position and speed
- Waste gate position
- Gearbox barrel position
- Gearbox mainshaft and layshaft speeds
- Gearbox, driver control input (upshift, downshift)
- Steering angle
- Any accelerometers
- Internal accelerometers included in electronic boxes (subject to approval)
- Any rotational acceleration sensors
- Any linear position sensors

- Any liquid level sensors
- Load cell
- Lambda sensors
- Turbo speed sensors

TIRE PRESSURE MONITORING SYSTEM

All Cars must utilize an appropriate motorsports specification Tire Pressure Monitoring System (TPMS).

- All wheels must be equipped with TPMS sensors
- TPMS data communication must be configured to the Scrutineering Data System per the championship specific electronics requirements
- TPMS must transmit pressure data when the car is in motion
- Data must be accurate to the satisfaction of WEC and IMSA

8.6 Additional IMSA specific logged channels:

IMSA requires the following additional channels to be available through CAN interface to the scrutineering logger per the GTP Scrutineering System DBC Files:

- Calculated front-left, front-right, rear-left and rear-right ride height from the three laser inputs (Team_xRideHeightAeroFL, , etc.) resolved to give ride height at the X position of the axle centrelines relative to the reference plane and at car width in Y (+/- 1000mm from centreline)
- Vertical displacement at each of the four-wheel hubs calculated from damper travel sensors (Team_xWheelTravelridFL, etc.), These should be calibrated to read zero ~~at~~ with the suspension in full droop (meaning the full extension of the damper without internal or internal bump stops) and be increasing (positive) in bump. Small errors, for example due to variation in motion ratio, will be acceptable.
- Vertical aero force at each of the four-wheel hubs calculated from pushrod load cells and motion ratio (Team_FWheelLoadFL, etc.). These should be calibrated to read zero with the suspension in full droop and be increasing (positive) in bump. Errors due to kinematic, flexure and other issues, will be acceptable.

The calculations and inputs for these channels, including highlights of assumptions made regarding kinematic effects, must be defined by each LMDh manufacturer and must be made available to IMSA.

8.7 Sensor calibration

8.7.1 WEC Specific

DRIVESHAFT TORQUEMETERS USAGE

a) Offset Tests

The method for completing driveshaft offset tests is known as the sensor spin test. This is completed by fitting an extension loom between the sensor connection & the chassis loom connection and disconnecting the anti-rotation fixing. The car should be on stands with no load on the driveshaft sensors, this means no brake pressure applied, nobody touching the shafts/wheels/hubs other than the person carrying out the test.

During an official event, the offset test must be done with the following periodicity:

- 2 x for each fitted driveshaft before any official event (including prologue). These tests should be spaced out, ideally with movement of the car between but no on track running,
- After every Qualifying Session,
- Before and after every Race,
- If the torquemeter did run more than 8000 km since its last calibration,
- At any time the regulatory body requests it (should we see any overload in particular).

The corresponding values measured will have to be added to ACOTechOnline not later than two hours after the offset test has been done. For further details regarding the procedure and the setup, please refer to the "Magcanica_Plus1_Message_Offset_Tests_Rev14.pdf" document that is included in the Electronic Package.

b) Usage & recalibration procedure

The procedure to be applied depending on offsets reading:

- As long as the offset is stable (deviation < 5 N.m) between two spin tests, a sensor is considered OK provided the absolute offset value does not exceed 50 N.m.

  If the offset absolute value exceeds 50 N.m it will have to be sent back to the supplier for control and recalibration.

The reason of this is that the sensors delivered with an initial offset value close to zero might exhibit once installed in the car an offset up to 50 N.m function of the surrounding magnetic field.

- Any offset value exhibiting a deviation higher than 10N.m between two spin tests needs to be reported to the ACO/FIA, who will provide the instructions (re-performing the spin test and/or sending back to the supplier for recalibration).

c) Calibration process

The max calibration limit is:

- Rear: +/-5500 N.m

  During use, the torque sensors should not be subjected to overloads, as this may affect the calibration of the sensor. Any overload overshooting the maximum absolute value (hence positively or negatively) by more than 20% will be suspended from use in official events without a recalibration.

  Additional note : should the layout of the drivetrain allow it (identical driveshafts on both sides), any swap between left and right systems has to be submitted to the ACO/FIA.

8.7.2 IMSA Specific

All sensors should use commonly found offsets (zeroes) and gains. Specifically:

These checks should be made when car is on weighbridge during safety checks at each event and after the car has been allowed to settle.

LOAD CELLS

The channel above ("load cells") in section 8.4 above should give the raw absolute eye to eye load at the pushrod (i.e. +ve in compression and -ve in tension).

DAMPER TRAVELS

See section 8.6

LASERS

Front RH laser calibration: Teams should bring a stepped jig or jigs that can be held against the tub/bib/floor LE, intersecting the laser beam(s) at least at two known distances. The laser ride height these surfaces represent (and the local Z-height of the area around the laser beam) must be marked on the jig. These distances will then be used to correct the offset and gain of the readings in the data logger.

Rear RH laser calibration: Teams should bring a U-shaped, stepped jig that can be held against the underfloor at either side of the laser beam, intersecting the laser beam at least at two known distances. The laser ride height these stepped surfaces represent (and the local Z-height of the floor around the laser beam) must be marked on the jig. These distances will then be used to correct the offset and gain of the readings in the data logger.

In addition to the above, ride heights from these on-car lasers will be compared to manual readings taken in mandatory technical inspection and any discrepancies corrected in the car data systems.

DRIVESHAFT TORQUEMETERS USAGE

Offset Tests

The procedure for conducting driveshaft offset torque sensor calculations are also known as sensor spin tests. Preparation for this test includes utilizing an extension loom no shorter than 300 mm to connect to the sensor and chassis loom while disconnecting the torque sensor's anti-rotation device. The car should be on stands and free from all loads on the driveshaft sensors; meaning no interfering suspension components, applied brake pressure nor person touching the driveshafts/wheels other than the technician conducting the test.

a) Offset Test Procedure:

Step	Action
1	Ensure hub is free of any additional mass or load, including but not limited to: Wheels, wheel nuts, set up stands, warm up weights.
2	Ensure Scrutineering USB data stick is inserted in the designated scrutineering logger port.
3	Confirm telemetry is on and transmitting, as shown on the XAP display.
~~3~~ 4	Disconnect the torque sensor bodies from their respective anti-rotation devices.
~~4~~ 5	Verify that the extension looms are securely connected to both torque sensors simultaneously.
~~5~~ 6	Initiate the offset test on the sensor under evaluation by activating the "Offset Start Trigger" flag for the corresponding axle being tested. The trigger must be sent by an approved external device.
~~6~~ 7	Manually rotate the torque sensor body three full turns forward at a very slow and uniform rate, ensuring no mechanical resistance is generated.
~~7~~ 8	Manually rotate the torque sensor body three full turns backward at the same slow and uniform rate, without inducing resistance, returning to the original starting position.
~~8~~ 9	Terminate the offset test by triggering the **"Offset Stop Request"** bit for the corresponding axle using an external device only.
~~9~~ 10	Observe the "Offset Calc Complete" status bit. A valid test requires the bit to transition from low to high and back to low. If this condition is not met, repeat steps ~~5~~ 6 through ~~9~~ 10.
~~10~~ 11	Repeat steps ~~5~~ 6 through ~~9~~ 10 for each torque sensor body. Two valid offset tests must be completed per sensor.
~~11~~ 12	Upon completion of both sensors' tests, disconnect the extension looms, reconnect the main loom, and reattach the anti-rotation devices.
~~12~~ 13	Export and submit the offset test data stored on the Scrutineering USB data stick as one file to the required team location.

During an IMSA Event, the spin test must be performed and corresponding data submitted for axles to be used on the Car within these windows unless otherwise communicated via Technical Bulletin:

Test	Window Opens	Window Closes
1	Trailer Opening for the Event	Conclusion of ~~Safety Checks~~ WeatherTech Pre-event Inspection
2	Conclusion of final Practice Session	1 hour prior to ~~Qualifying~~ the start of the first Qualifying session
3	Conclusion of the Race or approved Retirement	30 minutes following the conclusion of the Race

Additional offset tests may be required by IMSA.
Offset tests must be submitted prior to on-track use following (but not limited to):

- Over-torque
- Axle replacement
- Removal/reinstallation of axle
- Mechanical changes made to the driveline components
- Removal/reinstallation of upright assembly

The corresponding values measured during all offset testing must be recorded via Scrutineering USB data stick.

IMSA must always have a time continuous record of the offset in the car during an Event.

~~Offset tests must be conducted in the paddock and triggered by a device external to the car.~~
Offset tests must be conducted in the Competitor's paddock location, with the car in its normal orientation to the satisfaction of IMSA Officials, and triggered by a device external to the car. Telemetry must be on and transmitting, as validated on the XAP display.

Offset test must not be triggered over CAN unless conducting an IMSA required spin test per the spin test requirements

b) Usage & recalibration procedure
~~Driveshaft(s) and torque sensor(s) may be required by IMSA to be inspected and/or recalibrated by the supplier when one of the following conditions are met~~
A driveshaft and its torque sensor must be recalibrated by the supplier before further use, when any of the following occur:

i. A single OT of 120% or more of the calibrated torque limit (6600 Nm or more, in either direction).
ii. The sensor's Overload Points reach 32 or more (shown by NNotifier_xx bit 5, "Overload Point Overflow").

A driveshaft and its torque sensor must be replaced when any of the following occur:

i. tCalibrationLife_xx (where xx designates location of axle) > 3200.
ii. The axle or sensor is damaged.
iii. ~~Sensors~~ Sensor(s) exceeding supplier defined maximum service life.
   ~~o tCalibrationLife_xx (where xx designates location of axle) > 3200~~

The replacement must be completed before the Car's next on-track activity.
If any of the recalibration conditions above occurs during a Race, IMSA may reduce the Car's power limit.
IMSA may also require inspection and/or recalibration if:

- If the offset value of a sensor shows a repeated deviation higher than 5 Nm between two subsequent spin tests.
- ~~An OT instance of magnitude greater than or equal to 120% of calibrated torque limits of +/- 5500 Nm.~~
- ~~After ten (10) OT instances of magnitude less than or equal to 120% of the calibrated torque limits of +/- 5500 Nm.~~
- ~~If axle(s) or sensor(s) are damaged.~~
- The offset peak-to-peak absolute value exceeds 50 Nm.
- If the offset absolute value exceeds 25 Nm.

Overload Points are calculated by the sensor firmware and reset only by supplier recalibration.

- The Entrant is responsible for tracking, maintaining, and ensuring driveshaft torque sensors respect the requirements of these regulations and associated appendices.

c) Calibration process
The maximum calibration limit is:

- +/-5500 N.m
- The torque sensor peak hold time must be set to NPeakHoldTime_xx = 8 (20 ms) at all times.

d) Service Life

- Entrants are responsible for tracking, maintaining, and ensuring driveshaft torque sensors will not exceed the maximum service life during an Event.
- Any damage, fluid leakage, and/or excessive wear during an Event must be reported to IMSA Technical Officials immediately.

e) Anti-Rotation Device (ARD)

- ARD installation must respect the torque sensor supplier requirements.
- As homologated

f) Change of Parts/Sensors

- Upon the change of axle(s) or torque sensor(s) in a Car prior to an Event, Entrants must provide history: quantity and magnitude of any Over Torque (OT) during non-IMSA sanctioned running, or axles intended for use in IMSA sanctioned track time by filling out the Sensor Scrutineering Declaration Form. Additional Data may be requested to the satisfaction of IMSA Officials.
- Upon the change of axle(s) or torque sensor(s) in a Car during an Event, Entrants must provide history: quantity and magnitude of any OT during non-IMSA sanctioned running, or axles intended for use in IMSA sanctioned track time prior to on-track use. Additional Data may be requested to the satisfaction of IMSA Officials.

8.8 Track signal information display

The display panel is intended to provide spectators with enhanced information.
The purpose is to have a text/graphic display to be able to impart more information (eg driver ID, pitstop times, Trap Speed, etc) in addition to position in class.

8.8.1 WEC Specific

Pre 2025:
Physical dimensions and mounting
370mm x 200mm x 5mm
Visible area: 363mm x 158mm
Mounting method: TBC
Mounting position: One unit per side, between front and rear axle.
There must be a clear/transparent protective cover (lexan or similar) in front of the LED panel.

Cooling requirements
A forced air cooling on the rear face of the panel is required.

Power supply
Max current 17A at 12v nominal (pair of panels) TBC

Connections
4 power (2 +12V, 2 ground)
1 CAN bus.
Connector or wires TBD

2025 Onwards:
The display panel characteristics and fitment are described in the electronic pack.

8.8.2 IMSA Specific

Cars must be equipped with approved LED leader light system as follows: a. XAP Leader Light System from Creative Motorsports Solutions (IMSA Electronics Ordering | IMSA).
This leader light system must be installed and connected per the Bosch Scrutineering System Manual and functioning during the Event.

ARTICLE 9: TRANSMISSION

9.8 Gear Changing (IMSA only)

A maximum of 10 violations will be permitted per stint after which penalties will apply.

9.11 Differential performance (*)

Delta Torque Allowance

Average Tyre Rolling Radius	mm	349
Car speed	Wheel Rev	Max Total Torque Transfer
kph	rad/s	Nm
10	8.0	9423
20	15.9	4712
30	23.9	3141
40	31.8	2356
50	39.8	1885
60	47.8	1571
70	55.7	1346
80	63.7	1178
90	71.6	1047
100	79.6	942
110	87.6	857
120	95.5	785
130	103.5	725
140	111.4	673
150	119.4	628
160	127.3	589
170	135.3	554
180	143.3	524
190	151.2	496
200	159.2	471
210	167.1	449
220	175.1	428
230	183.1	410
240	191.0	393
250	199.0	377
260	206.9	362
270	214.9	349
280	222.9	337
290	230.8	325
300	238.8	314
310	246.7	304
320	254.7	294
330	262.7	286
340	270.6	277
350	278.6	269

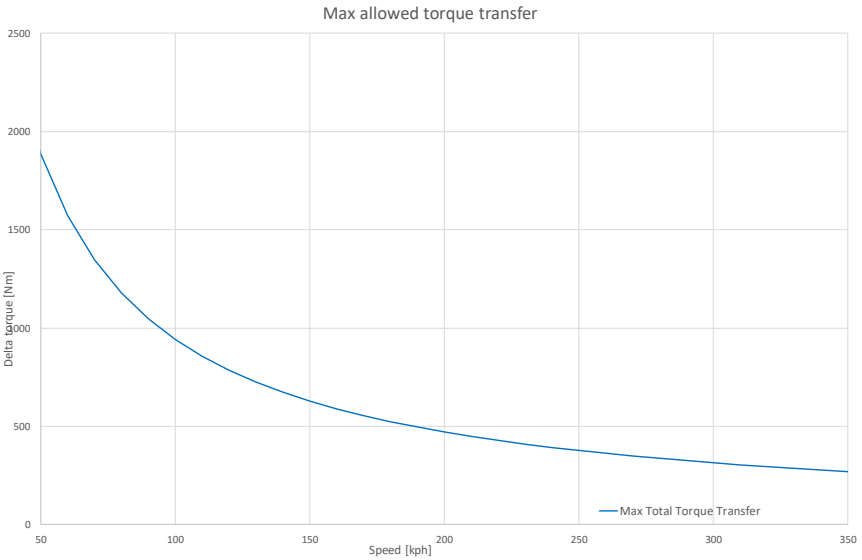

(*) Equivalent to a 50 kW ICE braking friction capability, a 150% differential transfer ratio and a tyre rolling radius of 349 mm.

ARTICLE 13: COCKPIT AND SURVIVAL CELL

13.18 Survival cell identification

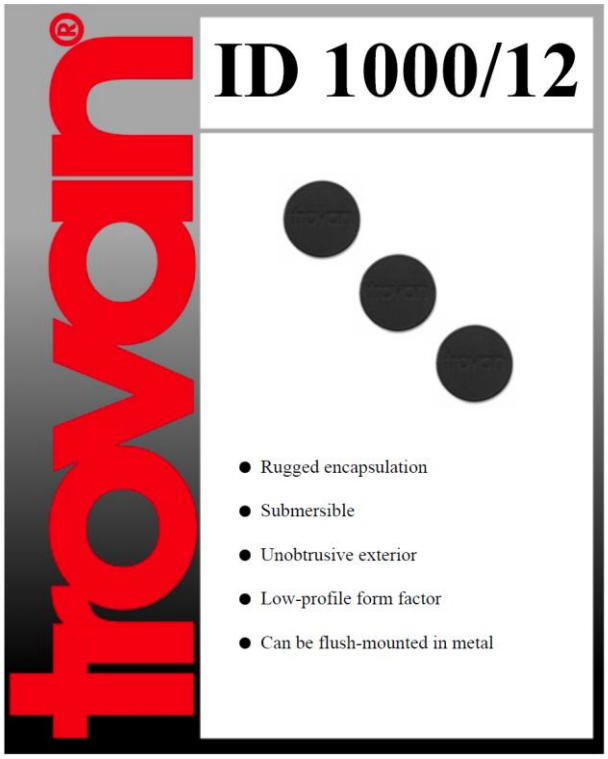

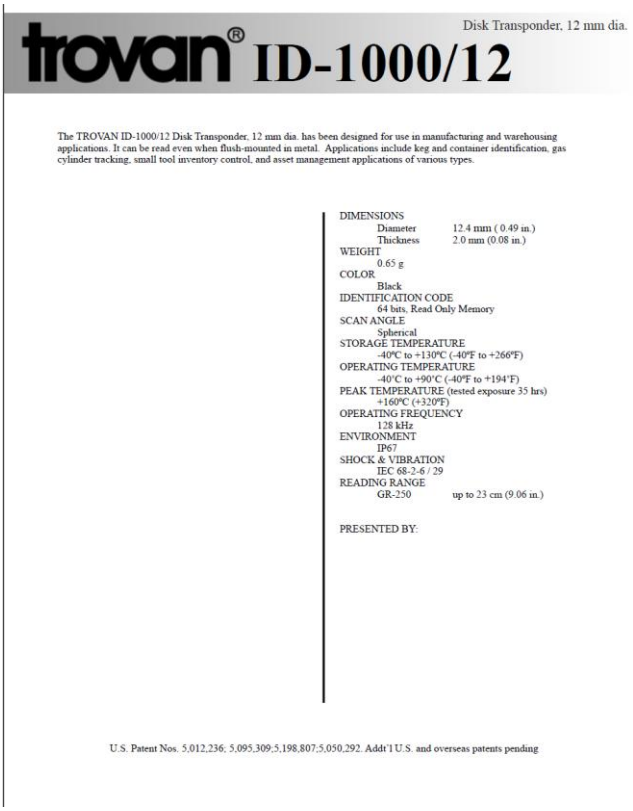

trovan® ID-1000/12

Disk Transponder, 12 mm dia.

The TROVAN ID-1000/12 Disk Transponder, 12 mm dia. has been designed for use in manufacturing and warehousing applications. It can be read even when flush-mounted in metal. Applications include keg and container identification, gas cylinder tracking, small tool inventory control, and asset management applications of various types.

DIMENSIONS
- Diameter 12.4 mm (0.49 in.)
- Thickness 2.0 mm (0.08 in.)

WEIGHT
- 0.65 g

COLOR
- Black

IDENTIFICATION CODE
- 64 bits, Read Only Memory

SCAN ANGLE
- Spherical

STORAGE TEMPERATURE
- -40ºC to +130ºC (-40ºF to +266ºF)

OPERATING TEMPERATURE
- -40°C to +90°C (-40ºF to +194°F)

PEAK TEMPERATURE (tested exposure 35 hrs)
- +160ºC (+320ºF)

OPERATING FREQUENCY
- 128 kHz

ENVIRONMENT
- IP67

SHOCK & VIBRATION
- IEC 68-2-6 / 29

READING RANGE
- GR-250 up to 23 cm (9.06 in.)

PRESENTED BY:

U.S. Patent Nos. 5,012,236; 5,095,309;5,198,807;5,050,292. Addt'l U.S. and overseas patents pending

ARTICLE 14: SAFETY EQUIPEMENT

ARTICLE 15: SAFETY STRUCTURES

ARTICLE 16: MATERIALS

ARTICLE 19: HOMOLOGATION

APPENDIX A: REFUELLING FOR ACO COMPETITIONS

1/ Definitions

Refuelling rig: Assembly of a complete pitstop rig, including the trolley, the supply tank, the gantry and the air installation.
Supply tank: Storage tank used for the refuelling.
Fuel bowser: Mobile refuelling unit with 120 litre maximum capacity to refuel/drain the car and the supply tank.
Gantry: Pitlane boom to carry the air hoses, rotary arms, identification boards.

2/ Throughout the event

It is forbidden to refuel the car by any means other than feeding by gravity using the supply tank with a maximum height of 2.2 m (2.6 m at the ''24 Heures du Mans'') above the track where the refueling takes place.

Except during the running sessions, it is allowed to fill the car directly with the fuel bowser (as described in Art. 9) only when the car is in the garage.

3/ Supply tank

Only one supply tank complying with Drawing 7.A below, must be used per car.
This supply tank must have a simple cylindrical internal shape with flat bottom (the use of double skin bottom is forbidden) and must not have any internal parts which could improve the fuel flow.

A fuel flow restrictor must be used on the outlet of the supply tank.
The restrictor diameter must be chosen in accordance with the refuelling time and/or energy per stint decided by the (Endurance Committee).

For safety reasons, the supply tank must be fixed, through a tower, onto a trolley with the following characteristics:

- all the supply tank tower components must be mechanically assembled without any degree of freedom in relation to the trolley.
- the base of the trolley must have a surface area of at least 2 m2 and must be made with a case fitted on 4 self-braking castors, ballasted with a weight greater than that of the tank filled with fuel.
- No pipes (fuel or air guns for example) are allowed to protrude from the face of the trolley facing the pit lane at a height below 1.3m.

A system for weighing the fuel may be applied through placing a weighing plate underneath the tank, provided that the characteristics set out above are respected.

There must be on top of the supply tank an air vent system complying with FIA regulations (see drawing 7.A).
The ventilation of the supply tank should only be made through this system. All the other openings must be closed hermetically.
The vent tube length can be adapted only if required and accepted by ACO/FiA.

If a sight glass is fitted to the outside of the supply tank, it must be fitted with isolating valves mounted as close as possible to the tank.

Refuelling equipment may be protected from direct sunlight provided the protection does not prevent inspection, or interfere with maintenance, of the equipment.
Any device or system which has the effect of heating or cooling the fuel is prohibited.

A gantry for supporting the refueling lines and air hoses may be attached to the trolley:

- it must be independent of both the supply tank and the tower.
- it is recommended that this gantry be allowed a degree of freedom in relation to the trolley (rotation following a vertical axis).
- it must not exceed 4.0 m in length and must allow a free passage of a height of 2.0 m over its entire length, including the accessories.
- an identification plate bearing the race number of the competing car must be fixed to its end.

The supply tank can only be used by the Competitor to refuel the car officially nominated for that pit.

4/ Refuelling and venting hoses
The length of the refuelling hose must be between 3.0 m and 5.0 m (between 4 m and 6.5 m at the "24 Heures du Mans"), quick coupling and male refueling valve included.
It must be fitted with a seal proof coupling to fit the filler mounted on the car (FIA – Annexe J Art. 252 – Drawing 252-5 Version B only).
The vent hose must be connected to the side of the supply tank in accordance with Drawing 7.A.

5/ Electrical ground connections
Before refueling (or draining) begins, the car connector and the refuelling (or draining) equipment must be electrically grounded. All metallic parts of the refueling installation, from the coupling to the supply tank and its rack must also be grounded.

6/ Dead man valve
A fuel attendant must always be present when refueling is on the process as to operate an automatic self-closing ball valve (dead man principle) placed on the outlet of the supply tank and allowing the fuel flow control.

7/ All hoses, fittings and restrictor which are used shall have a maximum inside diameter of 1.5 inch. (38.1 mm). It isn't allowed to add any parts inside the prescribed rigid section and or inside the hose.

8/ Using overflow bottles whatsoever is forbidden in the pits or around the pits.
Any container in which is stored some fuel coming from supplier needs to be fitted with self-sealing couplings.

9/ Fuel bowser
A fuel bowser with a maximum capacity of 120 liters must be used into the pit to transfer temporarily the fuel contained in the tank of the car and to ensure pumping in the supply drums, transfer to supply tank and filling. For Le Mans, the equipment for filling the supply tank will be provided by the organizer.

The activation of this fuel bowser must be carried out by means of a pressure push button (dead man principle). During any use, it must be connected to earth.

It must be completely sealed and must have a breather pipe fitted with a non-return valve and designed to avoid any liquid leakage.
The lines connecting the fuel bowser, the tank of the car, the supply drums and the autonomous tank must meet the requirements of the fuel lines fitted to the car.

The fuel bowser must be fitted with a coupling identical to the one of the car to enable the recovery of fuel contained in the vent hose.
However, if the fuel bowser has no coupler it is possible to use the receptacle described in article 7.8.4 of the sporting regulations.

10/ Fuel flow measurement
The use of an homologated fuel flow meter from FIA Technical list 46 is mandatory from 2025 onwards. It must be calibrated by a certified laboratory according to FIA Technical list 44.

The fuel flow meter must be installed between the outlet of the supply tank and the dead man valve. The complete fuel flow used to fill the car reservoir must go through the fuel flow meter.

Drawing 7.A:

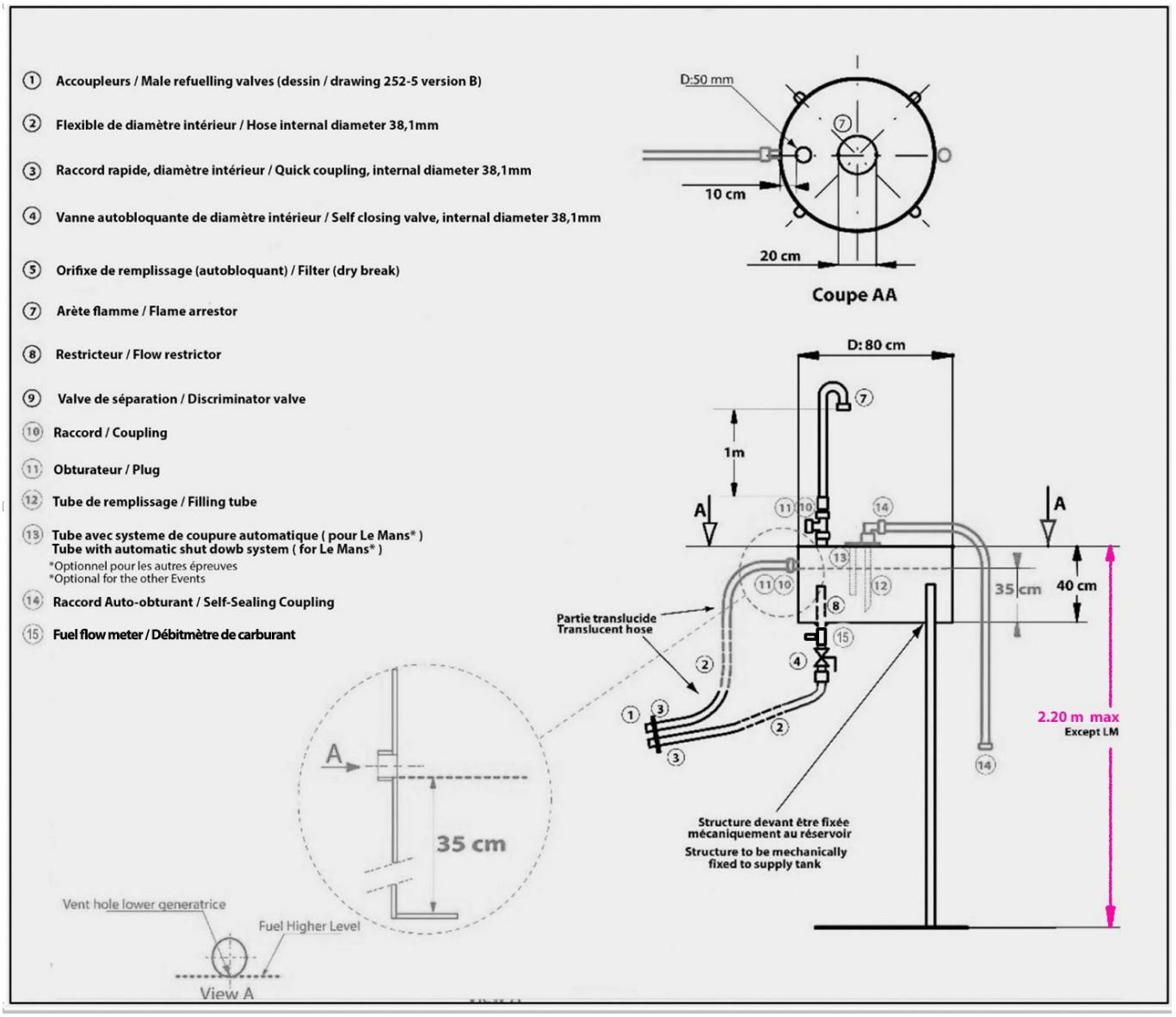
1 Accoupleurs / Male refuelling valves (dessin / drawing 252-5 version B)
2 Flexible de diamètre intérieur / Hose internal diameter 38,1mm
3 Raccord rapide, diamètre intérieur / Quick coupling, internal diameter 38,1mm
4 Vanne autobloquante de diamètre intérieur / Self closing valve, internal diameter 38,1mm
5 Orifixe de remplissage (autobloquant) / Filter (dry break)
7 Arète flamme / Flame arrestor
8 Restricteur / Flow restrictor
9 Valve de séparation / Discriminator valve
10 Raccord / Coupling
11 Obturateur / Plug
12 Tube de remplissage / Filling tube
13 Tube avec systeme de coupure automatique (pour Le Mans*)
Tube with automatic shut dowb system (for Le Mans*)
*Optionnel pour les autres épreuves
*Optional for the other Events
14 Raccord Auto-obturant / Self-Sealing Coupling
15 Fuel flow meter / Débitmètre de carburant
D:50 mm
10 cm
20 cm
Coupe AA
D: 80 cm
1m
A
35 cm
40 cm
2.20 m max
Except LM
Partie translucide
Translucent hose
Structure devant être fixée mécaniquement au réservoir
Structure to be mechanically fixed to supply tank
35 cm
Vent hole lower generatrice
Fuel Higher Level
View A

APPENDIX B: REFUELLING FOR IMSA COMPETITIONS

9.1. Fuel Transfer

9.1.1. Fuel must be transferred from the autonomous supply tank to the Car using the equipment and methods defined in this Article.

a. Approved equipment as defined herein must be:

i. Unmodified.
ii. Installed and operational.

b. Approved method:

i. Gravity.

9.1.2. Fuel transferred to the autonomous supply tank must be delivered by means of a hose fitted with a self-sealing connector (e.g. dry break, cam-lock) connected to the autonomous supply tank.

9.2. Pit Tank

9.2.1. Construction of the Autonomous Supply Tank must:

a. Comply with FIA Appendix J Article 257A Drawing n° 252-7 with the exception of the top plate shape and dimensions.
b. Not have sensors other than as required by IMSA
c. The maximum permitted refueling tank height is 2.5 meters as measured from the top surface of the vessel (not including vent, cover plate or fasteners) at a distance of 1.25 meters from the outermost face of the pit wall.

9.3. Peripheral Connections

9.3.1. Tanks must be equipped with the IMSA-specified peripheral connections between the tank outlet and the refueling hose.

a. Parts below must be purchased from RPXpress (Phone: +1-828-428-0820 Email: lmcelwain@rpxpress.com) and used unmodified:

Part Number	Part	Description
ATL-TF 147	12-Bolt Gasket	2 Needed (Outlet and Vent Flanges)
BSR.FR.1981.1	Bottom Elbow 67.12°	Female Camlock x Male 2" (Red)
BSR-FR R003	Deadman Valve	Stainless Deadman Valve
BSR.P.5K56.SS	Restrictor Housing	Deadman Outlet, 2” Male to 1 ½” Camlock
BSR.P.5K.RPX.SS	Hose Coupler	Connects 1.5” I.D. hose to Restrictor Housing
BSR.FR.DD	Discriminator	Rollover safety valve
BSR.FR.FN39	Vent mounting flange	Top surface mounting flange

b. Alternate discriminator valve(s) and mounting flange(s) may be permitted by IMSA Officials.
c. Sensor must be oriented such that the face plate is directed toward the hot pit lane.
d. FIA nut ring, as-supplied with original tank, must be used to secure the Sentronics Flow Sensor to the bottom of the supply tank using socket head cap screws.
e. Refueling System Assembly Illustration:

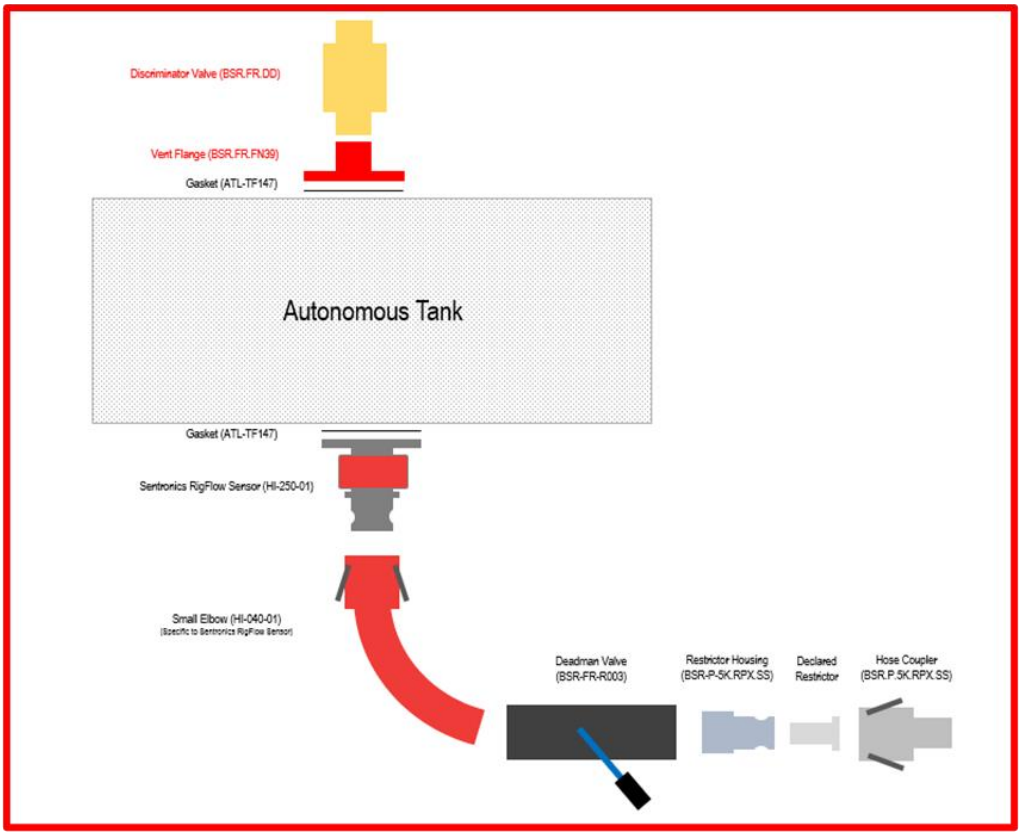

9.3.2. Deadman valve and bottom elbow assembly must be securely braced to remain attached to the tank in the event of an incident.

a. Mechanisms preventing normal operation of the deadman valve are prohibited.

9.3.3. During refueling the air vent outlet must be connected using an appropriate coupling to the tank.

9.3.4. A sight glass is permitted to be installed to the outside of the supply tank and must be equipped with isolating valves mounted as close as possible to the tank.

9.3.5. Vent tube may be shaped to avoid interference with overhead obstruction(s), the minimum functional vent height of 1 m must be respected per FIA Appendix J Article 257A Drawing n° 252-7.

9.3.6. A foam-based spark arrester must be installed in the vent head and remain visible from the pit lane surface.

9.4. Refueling Hose

9.4.1. Refueling/vent hoses must have one end equipped with a self-sealing connector to fit the autonomous supply tank outlet.

9.4.2. Refueling/vent hoses are permitted to be protected for the sole purpose of resisting abrasion damage.

a. Cover must be easily removable by means of full-length Velcro or zipper.

9.4.3. Hose maximum inside diameter:

a. Single-port (coaxial) systems must be less than 1.5 inches for Refueling Hose and less than 75.0 mm for Vent Hose.

9.5. Tank Support Stand

9.5.1. The tank must be attached to one of the following:

a. To a trolley meeting the following requirements:

i. All tower components must be assembled without any degree of freedom in relation to the trolley.
ii. Have a surface area greater than two (2) square meters.
iii. Utilize four (4) self-braking casters.
iv. Be ballasted with weight exceeding that of the tank when filled with fuel.

b. Scissor style (X-brace) stand

9.5.2. Trolley is permitted to have load sensors for the sole purpose of weighing fuel in the Autonomous Tank.

9.5.3. Tank Support Stand must have a minimum of two (2) feet directly on paved surface without the use of shims.

a. One shim is permitted to be added to each of two (2) feet.

9.5.4. Tank Support Stand feet must be a minimum of 200 mm wider than the diameter of the Autonomous Tank.

9.5.5. Tank Support Stand setup and leveling assembly(s) must be to the satisfaction of IMSA Officials.

9.6. Boom

9.6.1. Entrants are permitted to attach a member (boom) to the trolley.

a. Boom must be independent of the tank and the tower.

i. Boom member must be permitted a degree of freedom in relation to the trolley (rotation following a vertical axis).

b. Boom is permitted to support:

i. Hose for a Car utilizing an approved offset vent or fuel filler.
ii. Lighting for the illumination of the pit stop.
iii. Download cable.

9.6.2. Boom must be identified with the Car number fixed to its outboard end, which must be:

a. Visible from either direction
b. A minimum of seven (7) inches high with a 1.25-inch stroke

9.6.3. Boom must respect the following dimensions:

a. Must not exceed four (4) meters in length
b. Must permit free passage of a height of two (2) meters over its entire length including hoses and/or accessories.

9.7. Refueling Restrictor

9.7.1. During refueling, all fuel entering the Car must pass through the refueling restrictor.

9.7.2. Refueling Restrictor must meet the following criteria:

a. Material must be an aluminum alloy.
b. Must comply with the IMSA Fuel Restrictor Part Drawing at the end of these Technical Regulations.
c. Restrictor size varies from 22.0 mm to 35.0 mm by discrete increments 0.25 mm
d. Bore tolerance (+0.00 mm / -0.05 mm)

9.7.4. Refueling restrictors may be purchased from RPXpress (Phone: +1-828-428-0820 Email: lmcelwain@rpxpress.com).

9.8. Autonomous Tank Sensor System

9.8.1. Autonomous fuel supply tanks must be equipped with Sentronics RigFlow autonomous tank fuel flow meter and wiring loom. Approved sensor and wiring harness as follows:

a. Flow sensor part number (HI-250-01).
b. Wiring harness part number (CMS2021-1487).
c. The fuel flow sensor kit and wiring loom must be purchased from an authorized Sentronics dealer

i. Sensors packages are serialized and assigned to a Car and Pit Tank.

d. Sensors packages must remain exclusive to the assigned Car and Pit Tank throughout the Event in which the sensor is declared.

9.8.2. Entrant must ensure the flow sensor system is functional.

a. Two hours before 1st Practice Entrant must connect the loom to a specific pit-lane network box designated by IMSA.
b. Loom must remain connected until the conclusion of the Event
c. Entrant must remove the loom at the conclusion of the Event.
d. Flow Sensor must be installed in the location and orientation as indicated in Article 9.3.

9.8.3. Wiring loom connects the sensor package to a dedicated port on the IMSA pit-lane network box.

a. Wiring loom must be IMSA certified and unmodified
b. Wiring loom installation must remain visible and traceable.
c. Wiring loom part number (CMS2021-1487) must be connected directly to the flow sensor and directly to the pit-lane network per the drawing below:

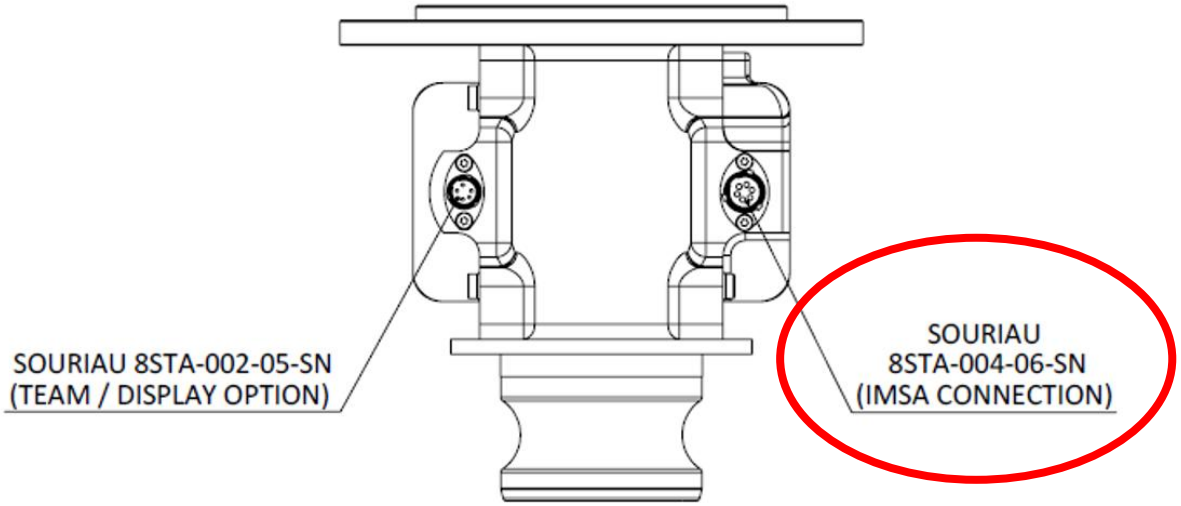

9.8.4. Entrant Data Port Access

a. Entrant is permitted to access data provided by the RigFlow meter by utilizing approved part(s) from approved vendors as listed below:

Part	Vendor Link
Greaves Rig Flow APMS V3 System (including approved harness)	Greaves
RigFlow Harness (approved harness only)	Creative Motorsports Solutions

b. Approved harness is permitted to be directly connected to the appropriate port of the RigFlow meter per the drawing below:

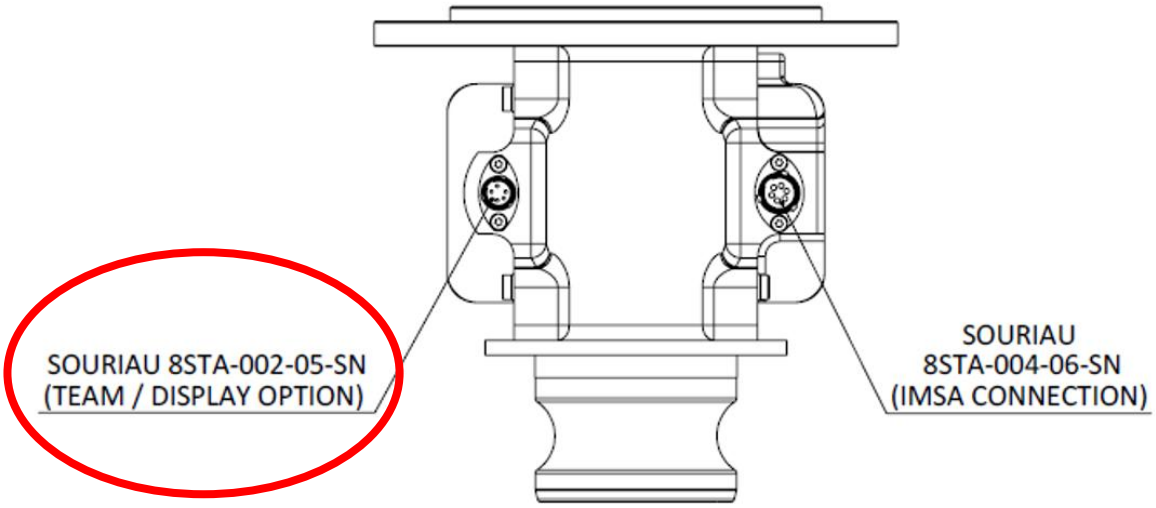

9.9. Scrutineering Fuel Collection

9.9.1. Fuel Collection Vessel must:

a. Be non-opaque.
b. Be free of any carriage or trolley system.
c. Have a flat bottom.
d. Rest without assistance on the IMSA scale for weight measurement before and after defueling the Car.

9.9.2. Fuel Pump Out Hoses

a. Entrant must utilize 2 separate hoses for defueling activities:

   i. Fuel drain
   ii. Vent return

b. Both hoses must connect the Car to the collection vessel.
c. Fuel drain hose must utilize a dry-break connection to the Car and fixed (sealed) connections to the fuel collection vessel.
d. Fuel vent return hose is permitted to utilize a temporary or dry-break connection to the Car and must use a fixed (sealed) connection to the fuel collection vessel.
e. Fuel drain hose must have a clear section of no less than 250 mm near the collection vessel.

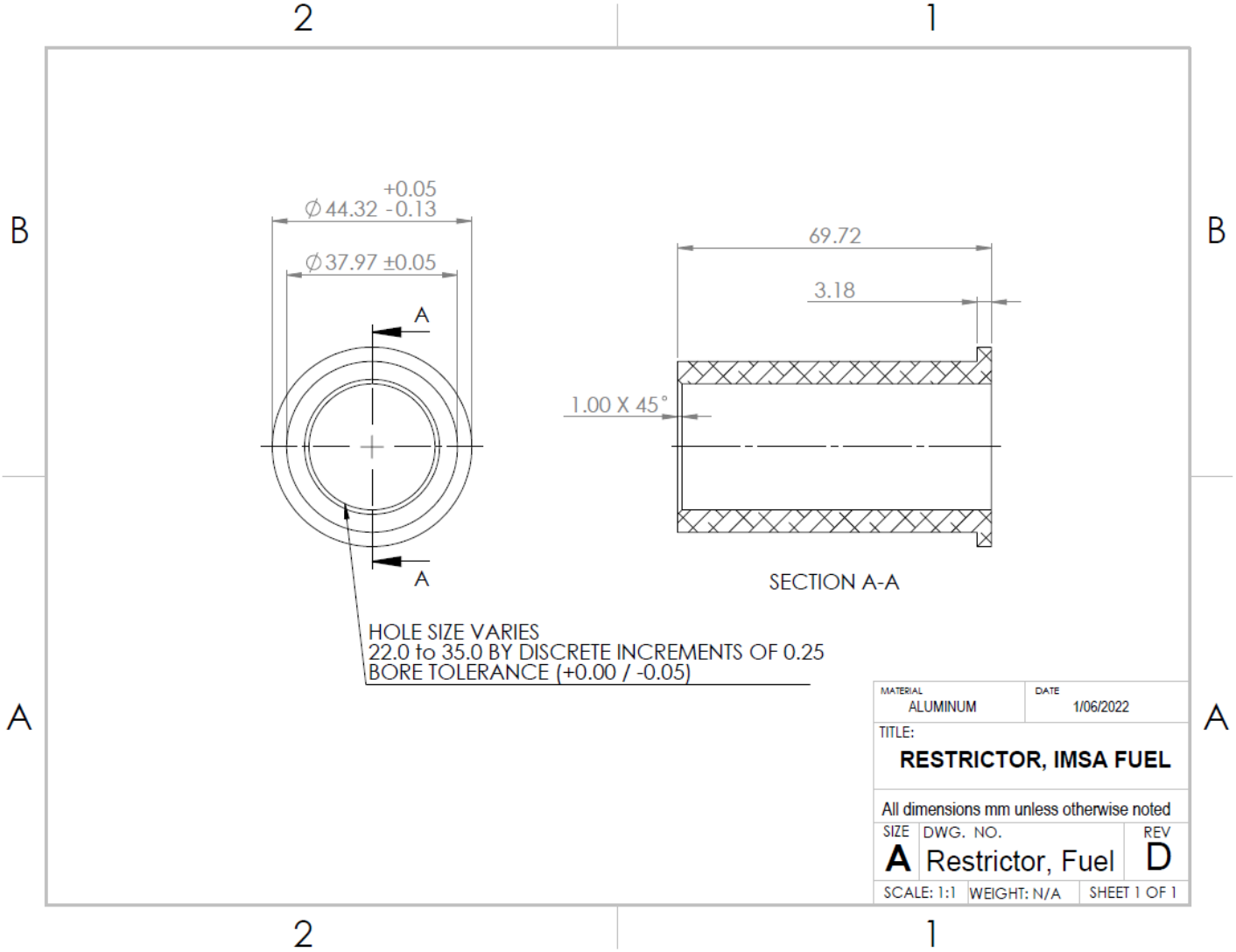

APPENDIX C: SCRUTINEERING

In order to assess the bodywork against these regulations manufacturers must be able to provide the following tools at all events (including the homologation wind tunnel and inspection components):

- Bodywork jigs
  - Reference Z0 angle (easily accessible, i.e. survival cell) for use with Mitutoyo Pro 3600 inclinometer
  - Rear wing main plane and flap profile (XZ cross section) with angle reference built in
  - Front splitter flap angle for use with Mitutoyo inclinometer - only if splitter flap is AAD
  - Front splitter profile (XZ cross section, 2–3 Y positions) with angle reference built in
  - Diffuser profile (XZ cross section, 2 – 3 positions in Y)
  - Diffuser strakes profile (3D)
  - Bodywork gurney profile (YZ cross section)
  - AAD position/angle (if not already included in the above)
- Bodywork deflection equipment
  - Rear wing flap
  - Rear wing main plane
  - Engine cover/tail gurney
  - Plank
  - Splitter
- Upright disassembly tools
- Homologated Bodywork CAD:
  - The full CAD of the bodywork (as detailed in the appendices to these regulations) is part of the homologation dossier and is used as a reference.
  - This final homologated CAD should be supplied by the manufacturer in the following variants:
    - Full CAD including all details
    - Reduced CAD for scanning (including all external and licked by the air surfaces including glass, fittings, fixings, etc.
    - CAD ready for CFD as described in the Appendix to Article 3
  - This CAD will be compared to measurements taken during events and, in conjunction with these regulations and the tolerances described above, used as part of technical scrutineering.
  - This comparison shall determine whether the car conforms to the requirements of the regulations, and is simultaneously, a match to the homologated geometry.
  - These measurements may be taken using a variety of tools including metrology systems and software.
  - Where metrology software requires a constrained fitment, the four datum locations (see 13.2) will be used to configure the alignment as follows:
    - Circle A exists at the most forward datum location, at the keel (LMDh only)
    - Circle B exists at the left side of the survival cell datum location, near the driver's seat.
    - Circle C exists at the right side of the survival cell datum location, near the driver seat.
    - Circle D exists at the most aft datum location, off the gearbox.
  - For LMDh cars, the X direction alignment (fore/aft) is defined by circles B and C; the Y direction alignment (side to side) is defined by circles A and D, and the Z direction alignment (elevation) is defined by circles A, B, and C.
  - For LMH cars in IMSA, the X direction alignment (fore/aft) is defined by circles B and C; the Y direction alignment (side to side) is defined by circles B, C and D; and the Z direction alignment (elevation) is defined by circles B, C, and D.
  - For the avoidance of doubt, where direct comparison from the datum pads to the part being measured is not possible, an intermediate reference part will first be aligned (using the above-described alignment process) and then the part being measured will be compared to this reference (using the best fit alignment integral to the metrology tools).
  - In addition to the comparison of the CAD to the scan in the global XYZ, ACO/IMSA may gather and use measurements local to parts (e.g. local height or width of a part) to determine legality and conformance to the homologated geometry.

3.5.9 Skid Block (applies to IMSA only)

Scrutineering of Skid Blocks shall be performed as follows:

The thickness of any point of the Skid Block within the Friction Area is defined by the distance from Z0 (ref. LMDh and LMH Technical Regulations 3.5.2 & 13.2). The minimum distance of any point within the Friction Area to Z0 is 20 mm. The Skid Block is measured while installed on the Car. Compliance is determined by comparison to Homologated CAD using metrology systems using the procedure defined in LMDh Appendix C.

APPENDIX D: LMDh Technical Directives

TD25-01 issue 2: 2nd July 2025: Brake Ducts

With reference to Art 3.5.10 Brake ducts, the following must be complied with:
The brake flange and the additional cooling device may touch each other at the plane defined by the inner friction face of the brake disk.
Fixings used to attach multiple parts together must be contained within the brake flange volume and/or additional cooling volume. By way of a simple flange (considered as part of the 'fixings'), a single part from one of the two volumes may extend into the adjacent volume, providing-

- Its function is purely to allow parts from the two volumes to be attached together,
- the complete flange of the extended part is in contact with the part it is being attached to in the adjacent volume.

Considering the intention of the regulations, the brake flange and the additional cooling device may be formed from one or multiple parts.
The additional cooling device may comprise of a fixed and a rotating part.
Rotating parts within the additional cooling device volume must not be handed about the centerline of the car and may not induce air flow by means of its rotation.

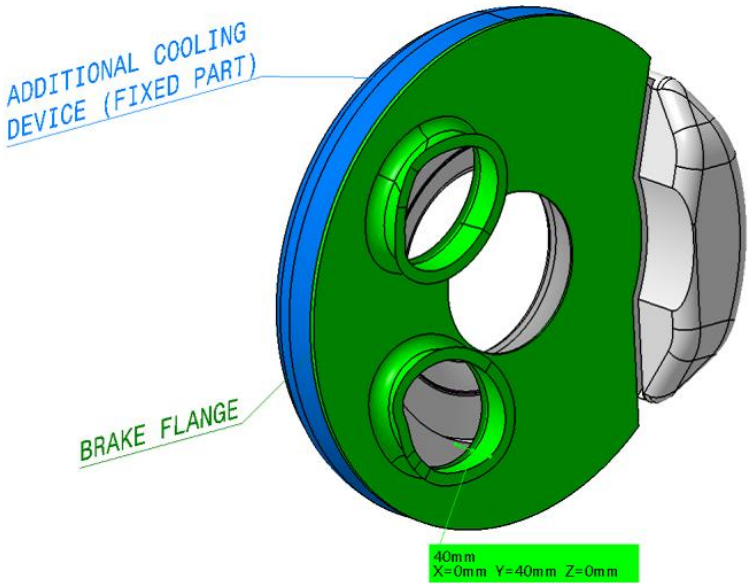

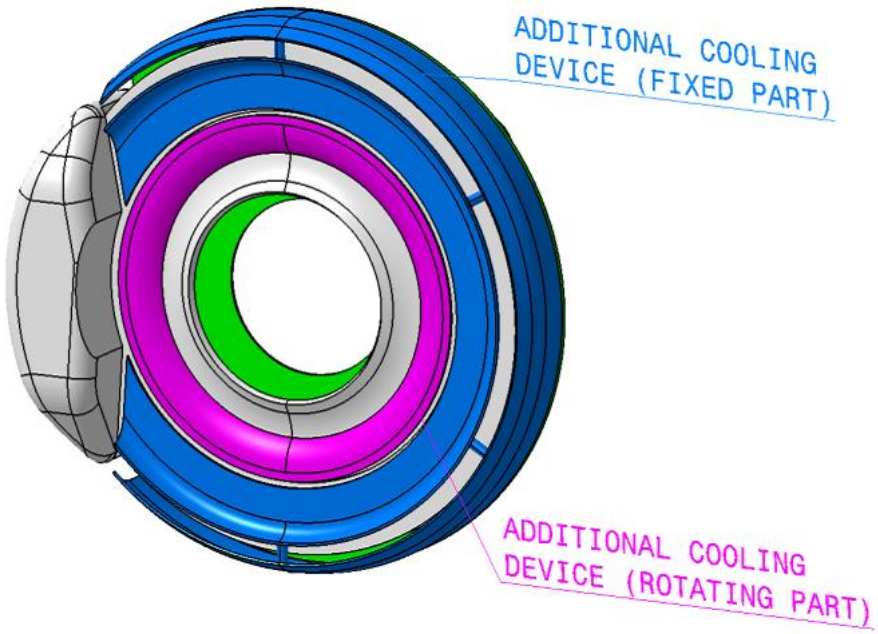

TD25-02 issue 1: 28th May 2025: Brake Material Weight Tolerance

With reference to section 11.3 of each Manufacturer's LMDh Complete Car Homologation Document, the tolerance for brake material is increased to:
- Pad (each): +/- 8%
- Disc (each): +/-5%.